2019 MULE SX™ 4x4 FI

PARTS DIAGRAM

Starter Motor

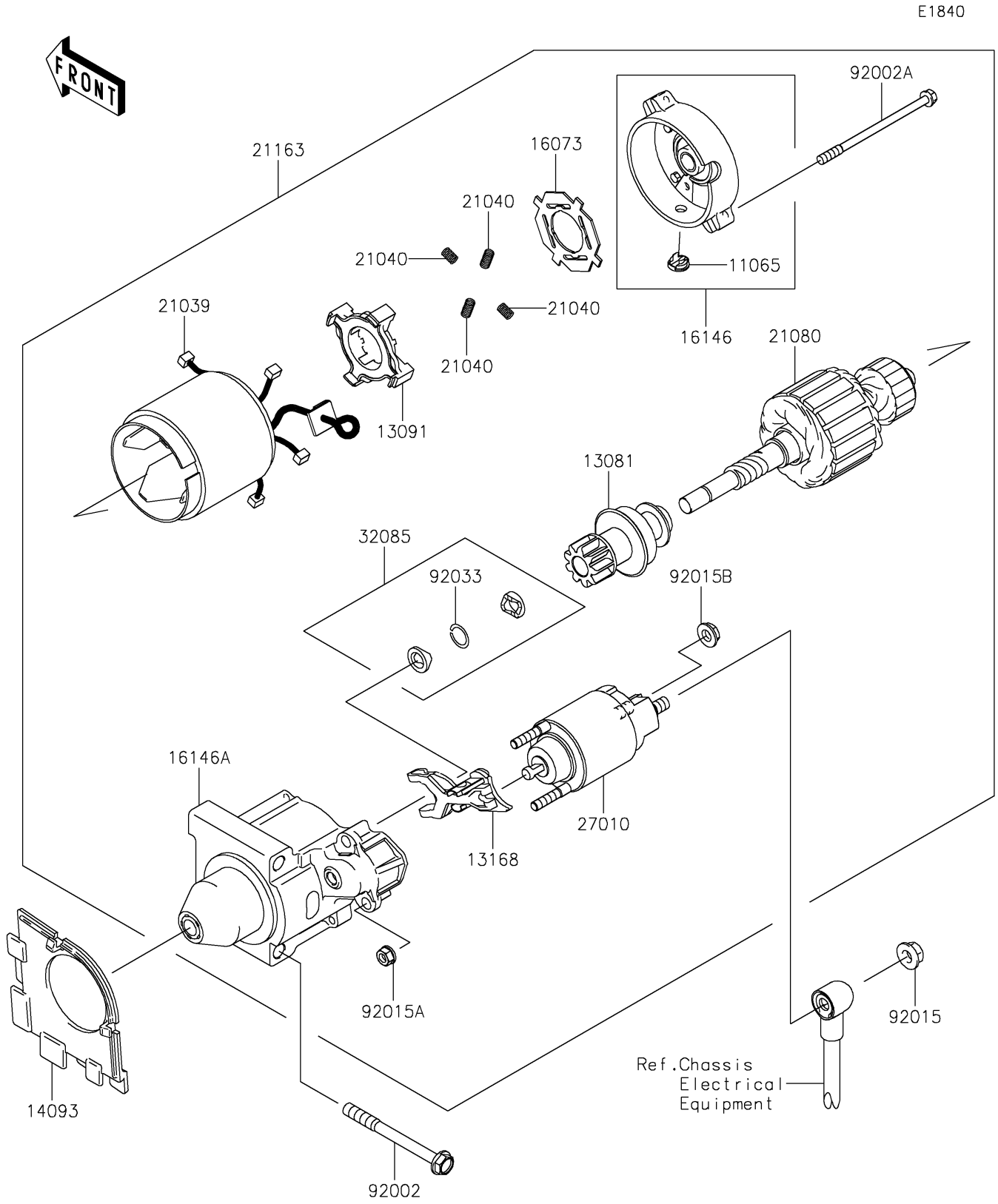

© 2026 Kawasaki Motors Corp., U.S.A.

2019 MULE SX™ 4x4 FI

PARTS LIST

Starter Motor

ITEM NAME	PART NUMBER	QUANTITY
CAP (Ref # 11065)	11065-2118	1
CLUTCH-ASSY (Ref # 13081)	13081-2227	1
HOLDER,BRUSH (Ref # 13091)	13091-2068	1
LEVER,SHIFT (Ref # 13168)	13168-2148	1
COVER (Ref # 14093)	14093-0932	1
INSULATOR (Ref # 16073)	16073-2098	1
COVER-ASSY,END (Ref # 16146)	16146-7016	1
COVER-ASSY (Ref # 16146A)	16146-7025	1
BRUSH (Ref # 21039)	21039-2059	4
SPRING-BRUSH (Ref # 21040)	21040-2052	4
ARMATURE (Ref # 21080)	21080-2058	1
STARTER-ELECTRIC (Ref # 21163)	21163-7028	1
SWITCH (Ref # 27010)	27010-7005	1
STOPPER (Ref # 32085)	32085-2097	1
BOLT,8X83 (Ref # 92002)	92002-1794	2
BOLT (Ref # 92002A)	92002-2277	2
NUT,FLANGED,8MM (Ref # 92015)	92015-1406	1
NUT (Ref # 92015A)	92015-2146	2
NUT (Ref # 92015B)	92015-2147	1
RING-SNAP (Ref # 92033)	92033-2081	1

© 2026 Kawasaki Motors Corp., U.S.A.