2020 MULE SX™ 4x4 FI

PARTS DIAGRAM

Differential

E1451

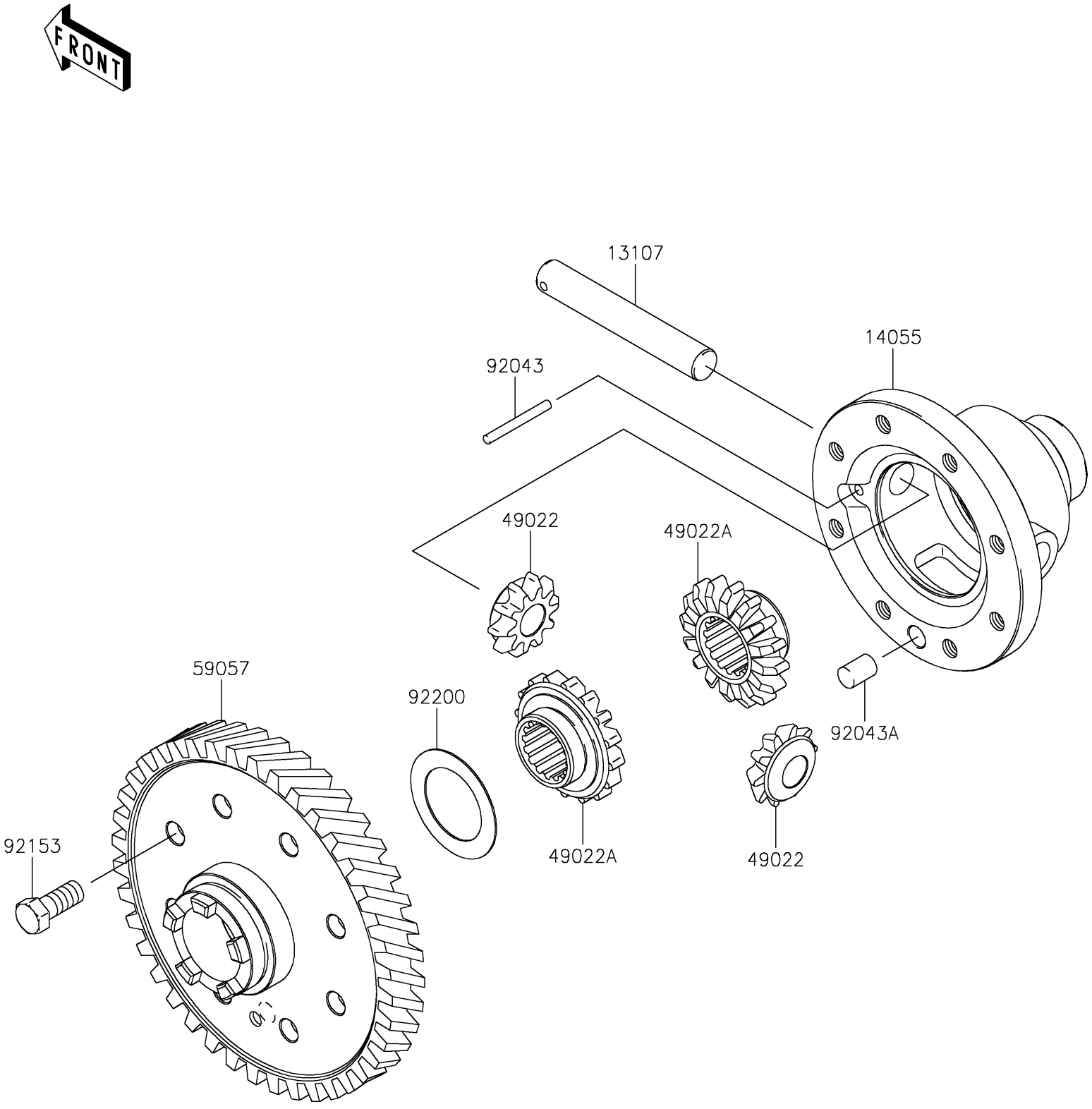

© 2026 Kawasaki Motors Corp., U.S.A.

2020 MULE SX™ 4x4 FI

PARTS LIST

Differential

ITEM NAME	PART NUMBER	QUANTITY

© 2026 Kawasaki Motors Corp., U.S.A.