2004 Ninja® ZX™-6R

PARTS DIAGRAM

Headlight(s)

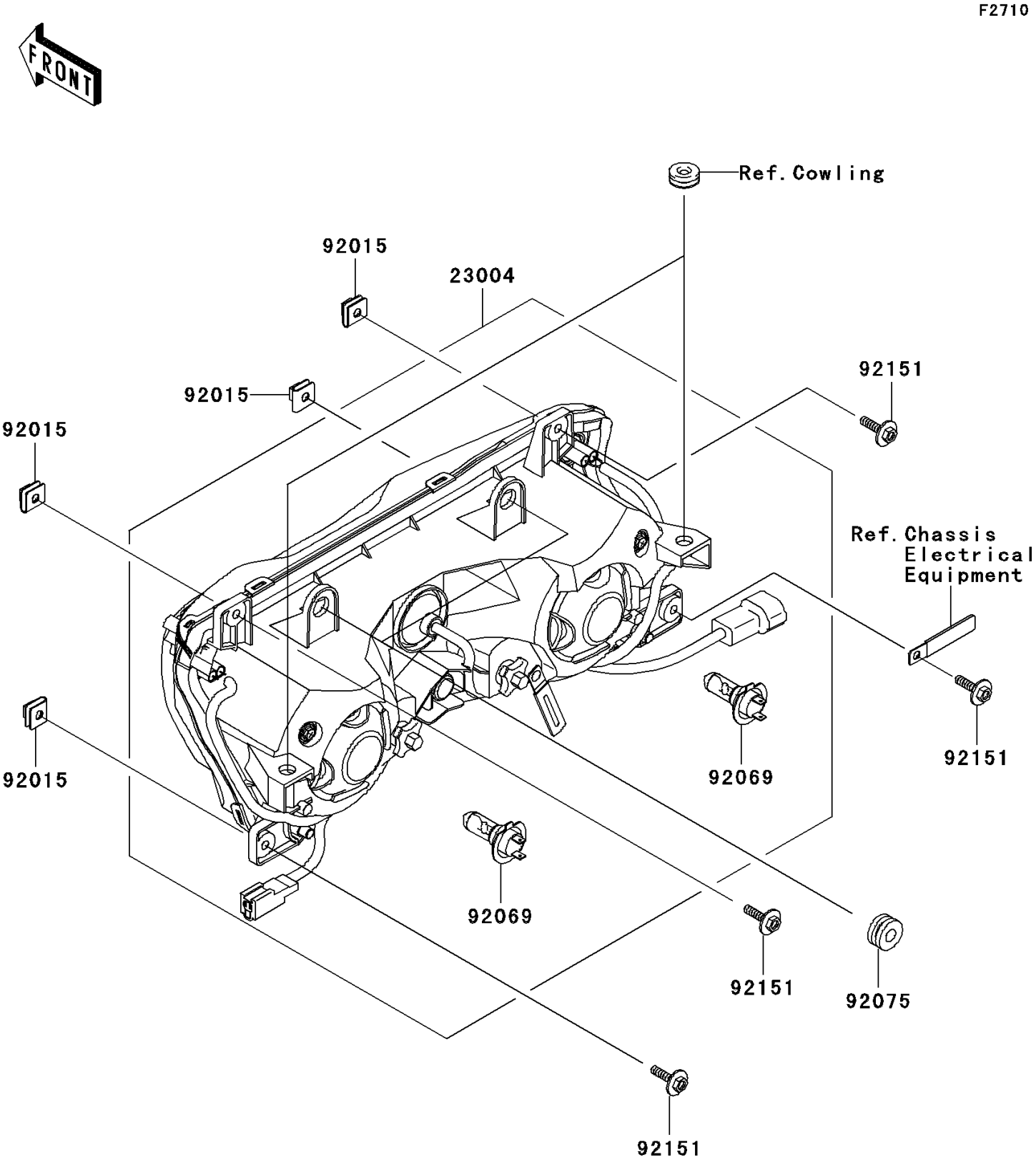

© 2026 Kawasaki Motors Corp., U.S.A.

2004 Ninja® ZX™-6R

PARTS LIST

Headlight(s)

ITEM NAME	PART NUMBER	QUANTITY
LAMP-HEAD (Ref # 23004)	23004-1510	1
NUT,6MM (Ref # 92015)	92015-1094	4
BULB,12V 55W,H7 (Ref # 92069)	92069-1126	2
DAMPER (Ref # 92075)	92075-1690	2
BOLT,6X25 (Ref # 92151)	92151-1241	4

© 2026 Kawasaki Motors Corp., U.S.A.