2004 Ninja® ZX™-6R

PARTS DIAGRAM

Seat

F2510

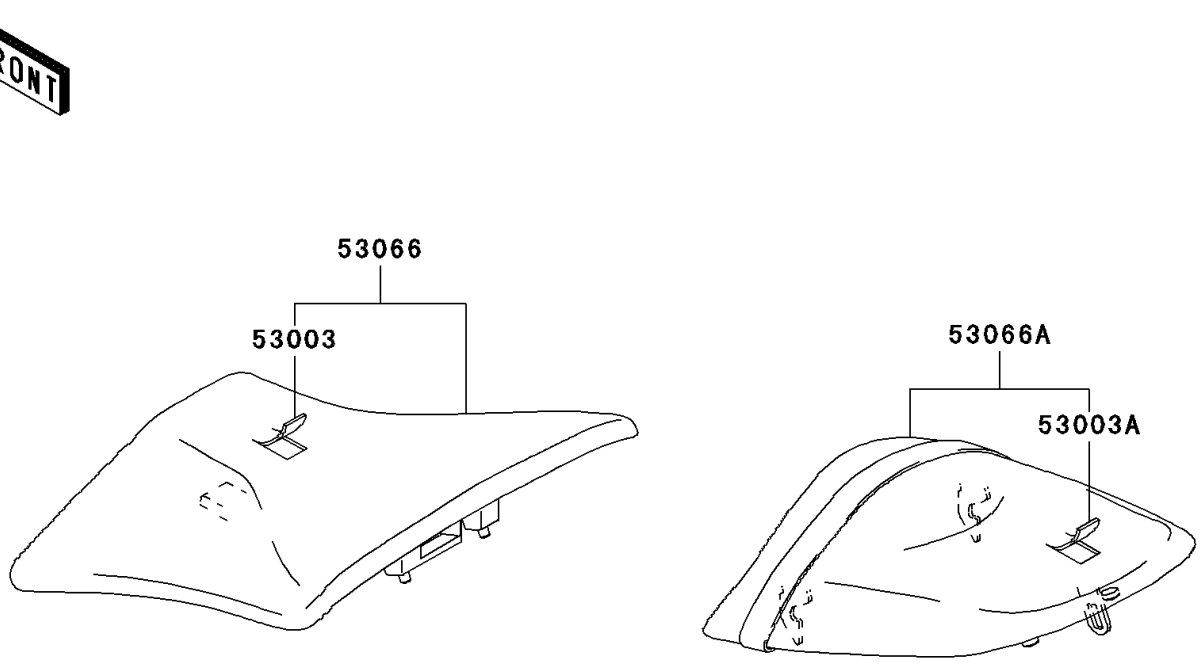

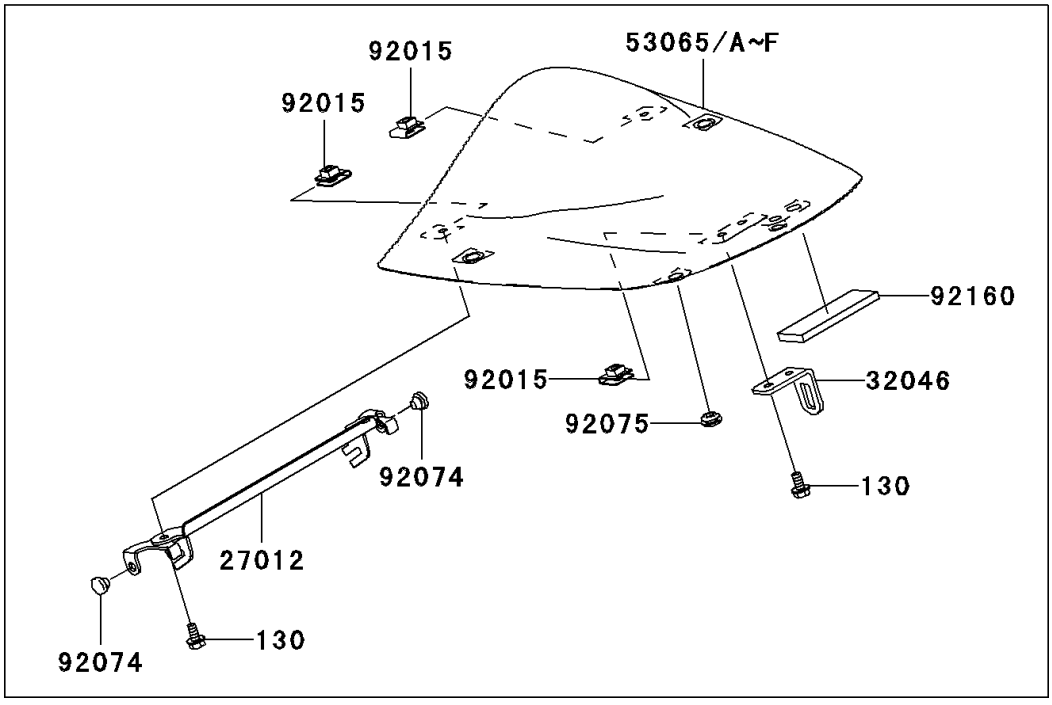

© 2026 Kawasaki Motors Corp., U.S.A.

2004 Ninja® ZX™-6R

PARTS LIST

Seat

ITEM NAME	PART NUMBER	QUANTITY
BOLT-FLANGED,6X14 (Ref # 130)	130J0614	4
HOOK,SEAT COVER (Ref # 27012)	27012-0013	1
BRACKET-SEAT (Ref # 32046)	32046-1468	1
LEATHER,FRONT SEAT,BLACK (Ref # 53003)	53003-1527-MA	1
LEATHER,REAR SEAT,BLACK (Ref # 53003A)	53003-1530-MA	1
COVER SEAT,C.T.BLUE (Ref # 53065C)	53065-1054-235	1
COVER SEAT,P.B.ORANGE (Ref # 53065D)	53065-1054-470	1
COVER SEAT,G.SILVER (Ref # 53065E)	53065-1054-474	1
COVER SEAT,L.GREEN (Ref # 53065F)	53065-1054-7F	1
SEAT-ASSY,FR,BLACK (Ref # 53066)	53066-1073-MA	1
SEAT-ASSY,RR,W/BAND,BLACK (Ref # 53066A)	53066-1074-MA	1
NUT,CLAMP,6MM (Ref # 92015)	92015-1531	4
PLUG,7X2 (Ref # 92074)	92074-028	2
DAMPER (Ref # 92075)	92075-1011	4
DAMPER (Ref # 92160)	92160-1323	1

© 2026 Kawasaki Motors Corp., U.S.A.