2004 Ninja® ZX™-6R

PARTS DIAGRAM

Front Wheel

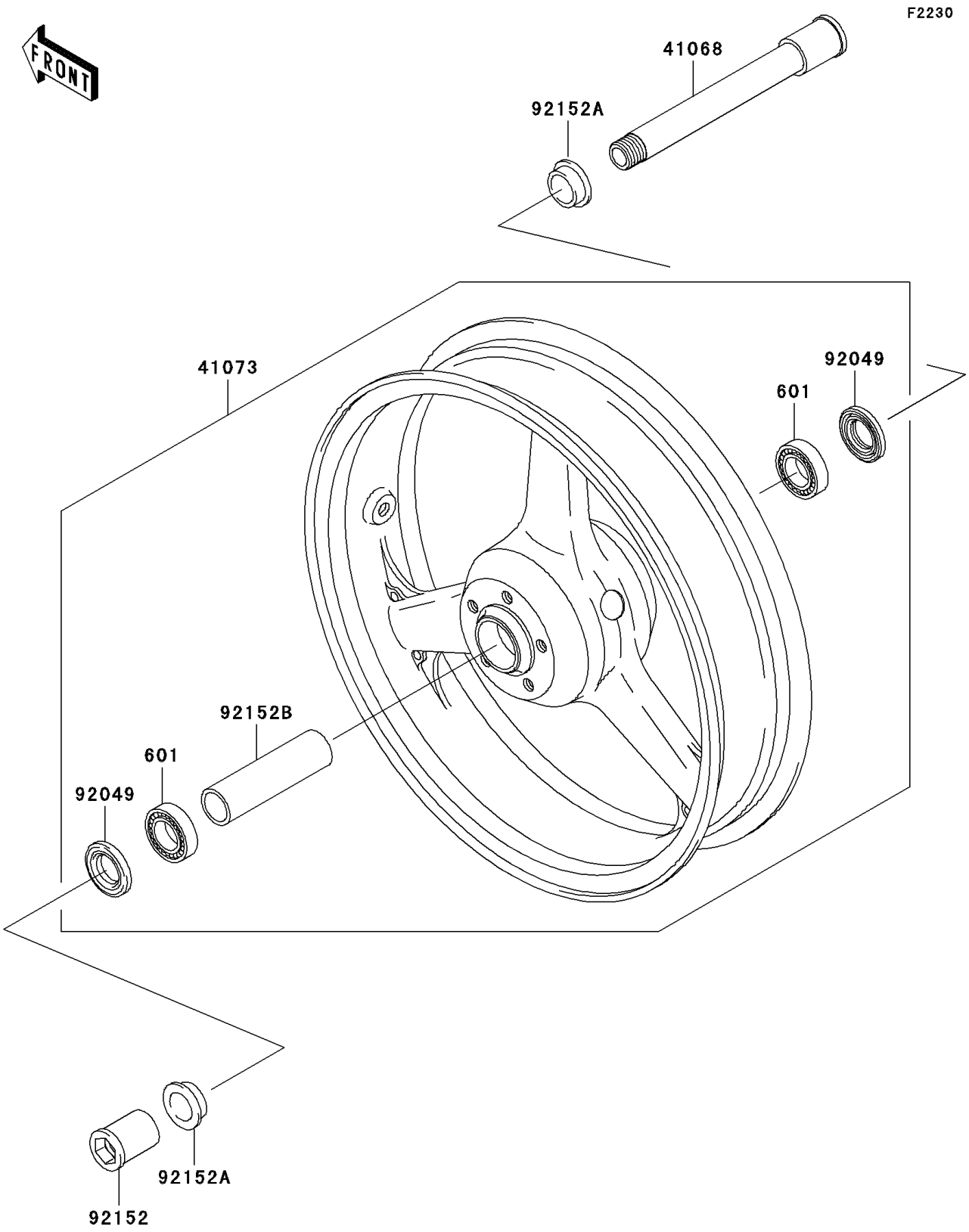

© 2026 Kawasaki Motors Corp., U.S.A.

2004 Ninja® ZX™-6R

PARTS LIST

Front Wheel

ITEM NAME	PART NUMBER	QUANTITY
BEARING-BALL,#6005UU (Ref # 601)	601B6005UU	2
AXLE,FR (Ref # 41068)	41068-1426	1
WHEEL-ASSY,FR,BLACK (Ref # 41073)	41073-1689-R2	1
SEAL-OIL,BJN 32 47 5 (Ref # 92049)	92049-1377	2
COLLAR,NUT,24MM (Ref # 92152)	92152-1464	1
COLLAR,FR AXLE,L=13 (Ref # 92152A)	92152-1470	2
COLLAR,FR HUB,L=115 (Ref # 92152B)	92152-1471	1

© 2026 Kawasaki Motors Corp., U.S.A.