2025 MULE PRO-DXT™ FE EPS

PARTS DIAGRAM

Labels

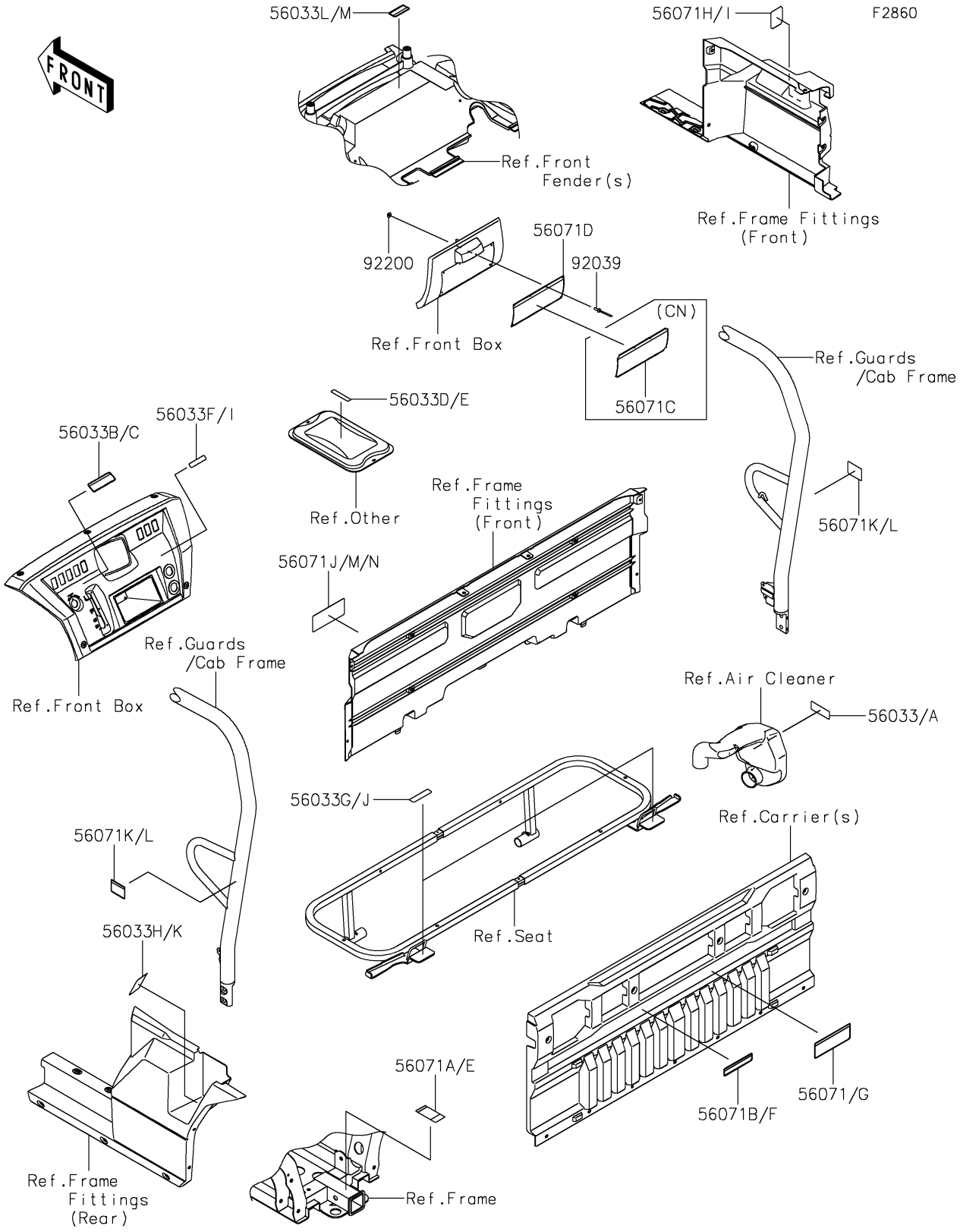

© 2026 Kawasaki Motors Corp., U.S.A.

2025 MULE PRO-DXT™ FE EPS

PARTS LIST

Labels

ITEM NAME	PART NUMBER	QUANTITY
LABEL-MANUAL,AIR CLEANER (Ref # 56033)	56033-0724	1
LABEL-MANUAL,SHIFT NOTICE (Ref # 56033B)	56033-0822	1
LABEL-MANUAL,STORAGE MAX LOAD (Ref # 56033D)	56033-0966	1
LABEL-MANUAL,DC OUTLET (Ref # 56033I)	56033-0997	1
LABEL-MANUAL,REAR SEAT (Ref # 56033J)	56033-0999	2
LABEL-MANUAL,DRIVE BELT (Ref # 56033K)	56033-1000	1
LABEL-MANUAL,FRONT HOOD (Ref # 56033L)	56033-1379	1
LABEL-WARNING,GENERAL (Ref # 56071D)	56071-0709	1
LABEL-WARNING,TRAILER HITCH (Ref # 56071E)	56071-0711	1
LABEL-WARNING,SCREEN OPERATION (Ref # 56071F)	56071-0712	1
LABEL-WARNING,CARGO CAPA. (Ref # 56071G)	56071-0713	1
LABEL-WARNING,DIESEL (Ref # 56071H)	56071-0746	1
LABEL-WARNING,TIRE&LOAD (Ref # 56071J)	56071-0755	1
LABEL-WARNING,BED OPERATION (Ref # 56071K)	56071-0979	2
LABEL-WARNING,TIRE&LOAD (Ref # 56071M)	56071-1156	1
RIVET,3.2X8 (Ref # 92039)	92039-3763	6
WASHER,3.5X8X1 (Ref # 92200)	92200-1251	6

© 2026 Kawasaki Motors Corp., U.S.A.