2022 MULE PRO-DX™ EPS DIESEL

PARTS DIAGRAM

Engine Mount

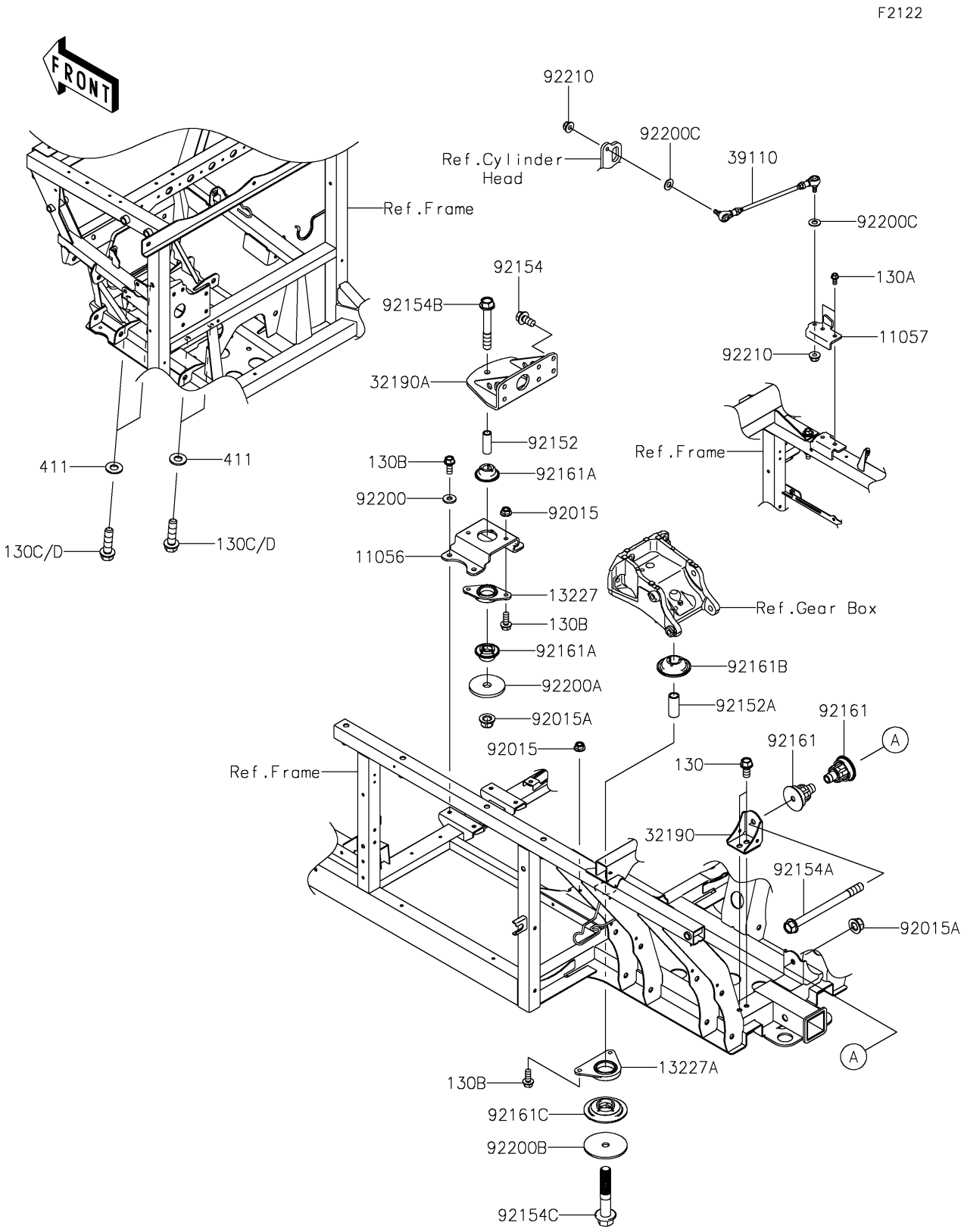

© 2026 Kawasaki Motors Corp., U.S.A.

2022 MULE PRO-DX™ EPS DIESEL

PARTS LIST

Engine Mount

ITEM NAME	PART NUMBER	QUANTITY
BRACKET (Ref # 11056)	11056-7475	1
BRACKET,TORQUE ROD (Ref # 11057)	11057-2696	1
HOUSING (Ref # 13227)	13227-0031	1
HOUSING (Ref # 13227A)	13227-0032	1
BRACKET-ENGINE (Ref # 32190)	32190-0662	1
BRACKET-ENGINE,FR (Ref # 32190A)	32190-0701	1
ROD-ASSY-TIE (Ref # 39110)	39110-0050	1
NUT,LOCK,FLANGED,8MM (Ref # 92015)	92015-1397	4
NUT,LOCK,FLANGED,12MM (Ref # 92015A)	92015-1433	2
COLLAR,13X19.1X54 (Ref # 92152)	92152-1802	1
COLLAR,17X23.8X54.5 (Ref # 92152A)	92152-2127	1
BOLT,FLANGED,10X20 (Ref # 92154)	92154-1321	6
BOLT,FLANGED,12X150 (Ref # 92154A)	92154-1322	1
BOLT,FLANGED,12X80 (Ref # 92154B)	92154-1419	1
BOLT,FLANGED,16X86 (Ref # 92154C)	92154-1763	1
DAMPER (Ref # 92161)	92161-1616	2
DAMPER (Ref # 92161A)	92161-1617	2
DAMPER (Ref # 92161B)	92161-1618	1
DAMPER (Ref # 92161C)	92161-1619	1
WASHER,8.2X20.0X2.5 (Ref # 92200)	92200-0205	4
WASHER,12.5X55X4.76 (Ref # 92200A)	92200-0913	1
WASHER,16.5X100X4.76 (Ref # 92200B)	92200-1747	1
WASHER,8.5X18X1 (Ref # 92200C)	92200-2284	2
NUT,FLANGED,LOCK,8MM (Ref # 92210)	92210-0493	2
BOLT-FLANGED,10X20 (Ref # 130)	130BA1020	2
BOLT-FLANGED,8X18 (Ref # 130A)	130CA0818	2
BOLT-FLANGED,8X20 (Ref # 130B)	130CA0820	8
BOLT-FLANGED,12X45 (Ref # 130D)	130CA1245	4
WASHER-PLAIN,12MM (Ref # 411)	411AA1200	4

© 2026 Kawasaki Motors Corp., U.S.A.