2018 JET SKI® SX-R™

PARTS DIAGRAM

Labels

F3183

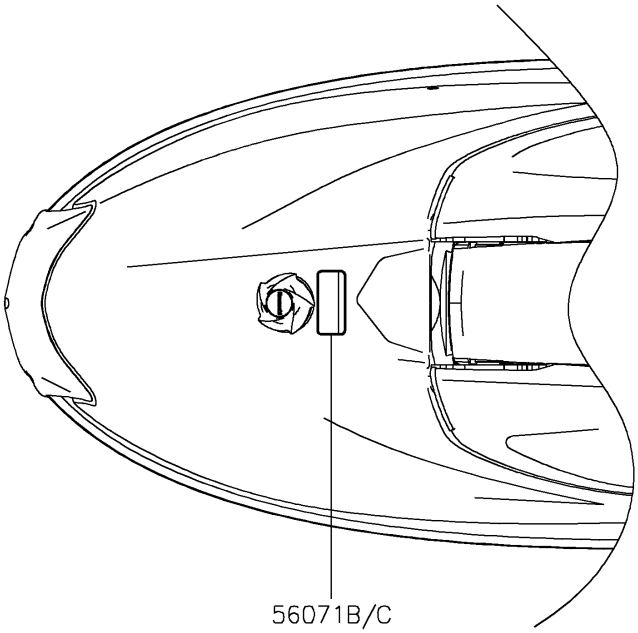

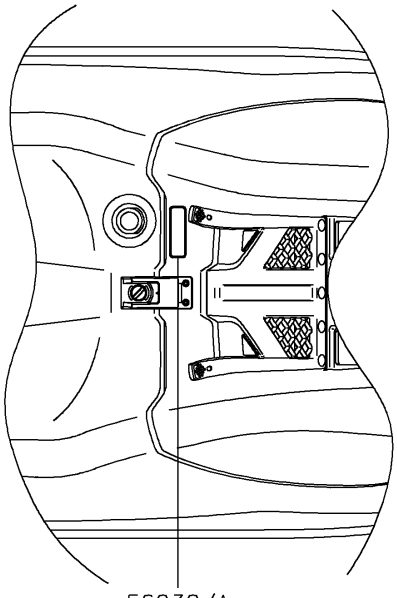

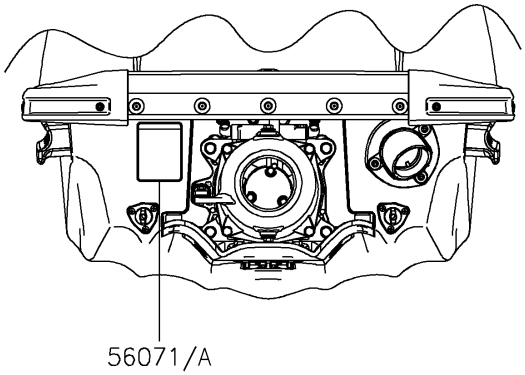

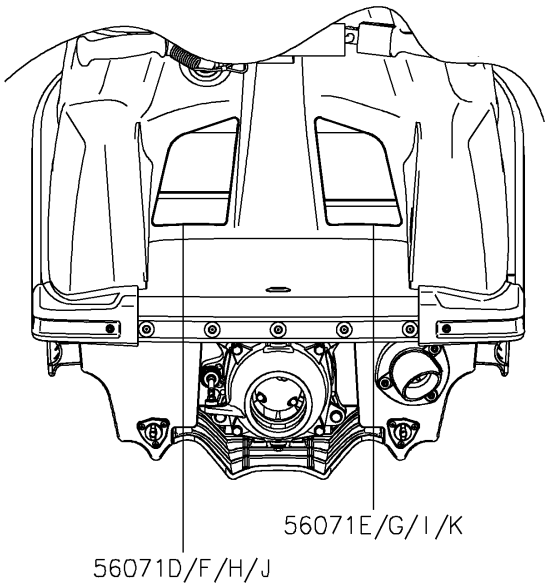

© 2026 Kawasaki Motors Corp., U.S.A.

2018 JET SKI® SX-R™

PARTS LIST

Labels

ITEM NAME	PART NUMBER	QUANTITY
LABEL,FIRE EXTINGUISHER (Ref # 56030)	56030-3755	1
LABEL-WARNING,RIGHTING (Ref # 56071)	56071-0398	1
LABEL-WARNING,FUEL SUPPLY (Ref # 56071B)	56071-0424	1
LABEL-WARNING,IMPORTANT SAFETY (Ref # 56071D)	56071-0658	1
LABEL-WARNING,AVOID COLLISIONS (Ref # 56071E)	56071-0665	1
LABEL-WARNING,IMPORTANT SAFETY (Ref # 56071F)	56071-0669	1
LABEL-WARNING,AVOID COLLISIONS (Ref # 56071G)	56071-0670	1

© 2026 Kawasaki Motors Corp., U.S.A.