2025 Ninja H2 Carbon ABS

PARTS DIAGRAM

Accessory(Slider)

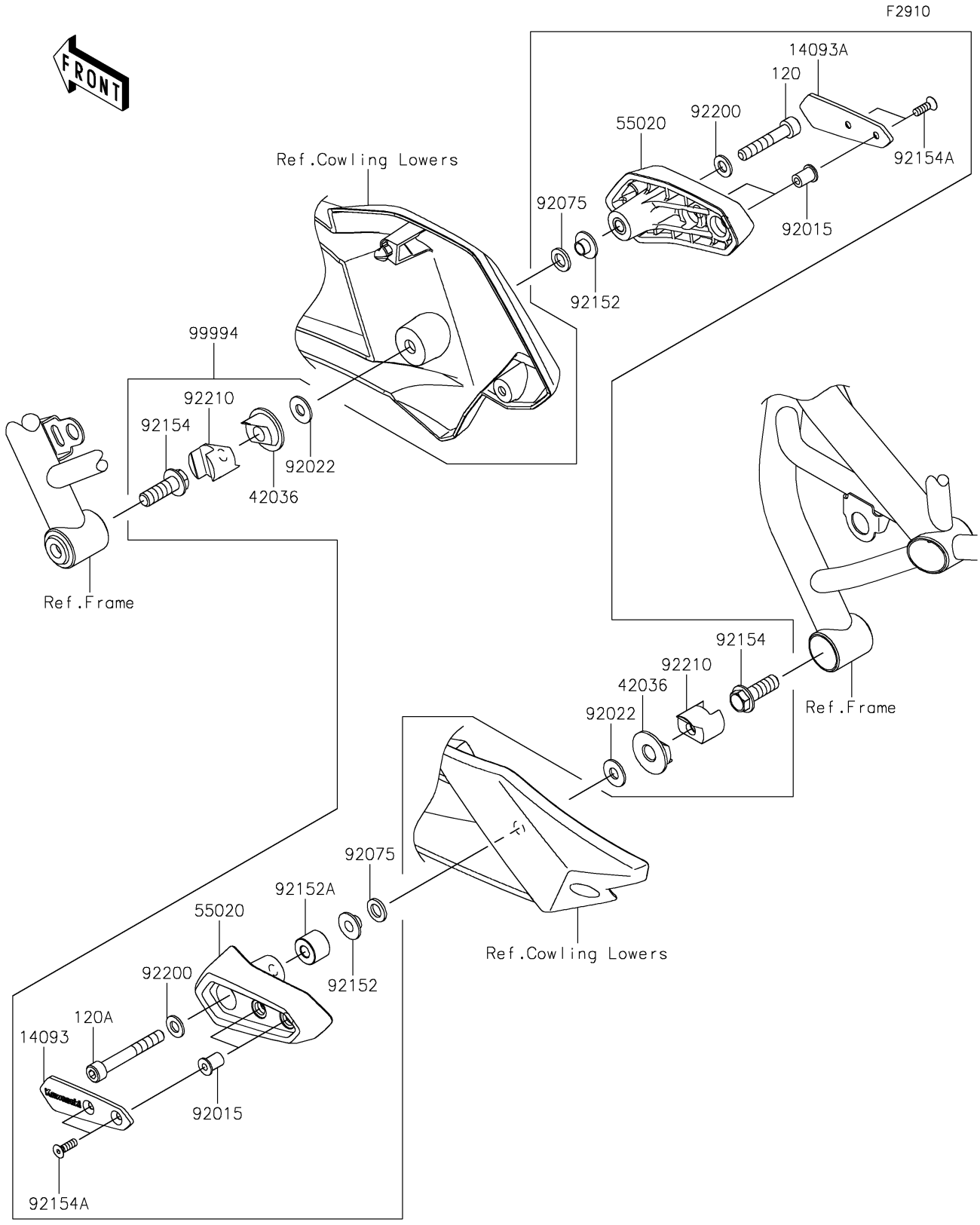

© 2026 Kawasaki Motors Corp., U.S.A.

2025 Ninja H2 Carbon ABS

PARTS LIST

Accessory(Slider)

ITEM NAME	PART NUMBER	QUANTITY
COVER,SLIDER,LH (Ref # 14093)	14093-0350	1
COVER,SLIDER,RH (Ref # 14093A)	14093-0351	1
SLEEVE,11X32X17.5 (Ref # 42036)	42036-0765	2
GUARD (Ref # 55020)	55020-1997	2
NUT,WELL,5MM (Ref # 92015)	92015-1757	4
WASHER,8.5X20X1.6,BLACK (Ref # 92022)	92022-1317	2
DAMPER (Ref # 92075)	92075-1564	2
COLLAR,8.1X20X7.5 (Ref # 92152)	92152-1980	2
COLLAR (Ref # 92152A)	92152-1990	1
BOLT,FLANGED,10X30 (Ref # 92154)	92154-0543	2
BOLT,SOCKET,5X16 (Ref # 92154A)	92154-1014	4
WASHER,8.4X16X1.6 (Ref # 92200)	92200-0807	2
NUT,8MM (Ref # 92210)	92210-1421	2
KIT-ACCESSORY,SLIDER (Ref # 99994)	99994-0919	1
BOLT-SOCKET,8X45 (Ref # 120)	120CA0845	1
BOLT-SOCKET,8X60 (Ref # 120A)	120CA0860	1

© 2026 Kawasaki Motors Corp., U.S.A.