2025 Ninja H2 ABS

PARTS DIAGRAM

Brake Piping

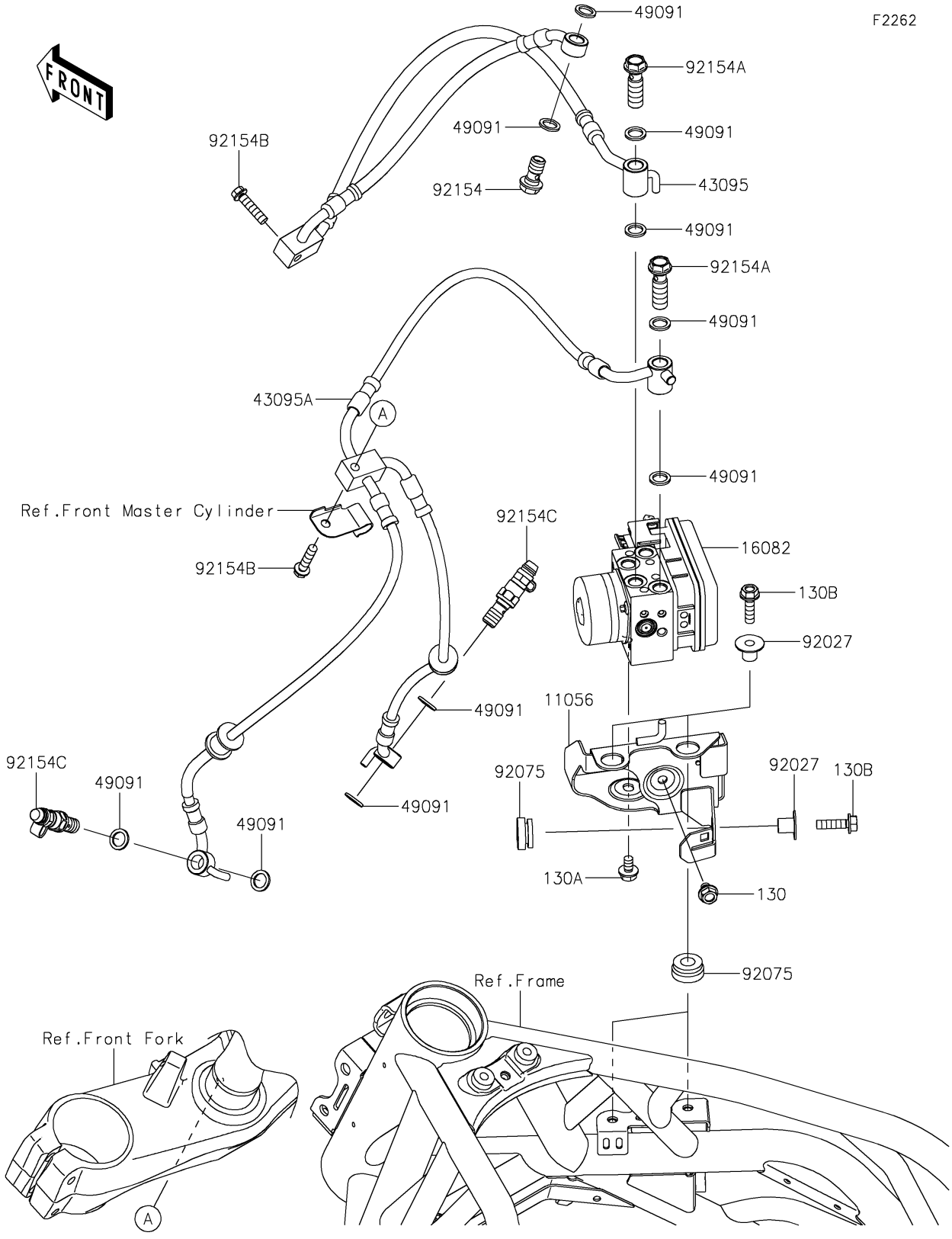

© 2026 Kawasaki Motors Corp., U.S.A.

2025 Ninja H2 ABS

PARTS LIST

Brake Piping

ITEM NAME	PART NUMBER	QUANTITY
BRACKET,ABS UNIT (Ref # 11056)	11056-7852	1
PUMP-ASSY-OIL,ABS,9.1MP (Ref # 16082)	16082-0822	1
HOSE-BRAKE,M/C-HU (Ref # 43095)	43095-0854	1
HOSE-BRAKE,HU-FR CALIPER (Ref # 43095A)	43095-1631	1
WASHER-SEAL,10.1X14.5X1.5 (Ref # 49091)	49091-0001	10
COLLAR,L=12 (Ref # 92027)	92027-1062	3
DAMPER (Ref # 92075)	92075-277	3
BOLT,BANJO,10X19 (Ref # 92154)	92154-1554	1
BOLT,BANJO,10X32.3 (Ref # 92154A)	92154-1555	2
BOLT,FLANGED,6X25 (Ref # 92154B)	92154-1849	2
BOLT,BANJO,10X19 (Ref # 92154C)	92154-4032	2
BOLT-FLANGED,6X8 (Ref # 130)	130BB0608	1
BOLT-FLANGED,6X10 (Ref # 130A)	130BB0610	1
BOLT-FLANGED,6X22 (Ref # 130B)	130BB0622	3

© 2026 Kawasaki Motors Corp., U.S.A.