2024 NINJA H2® ABS

PARTS DIAGRAM

Generator

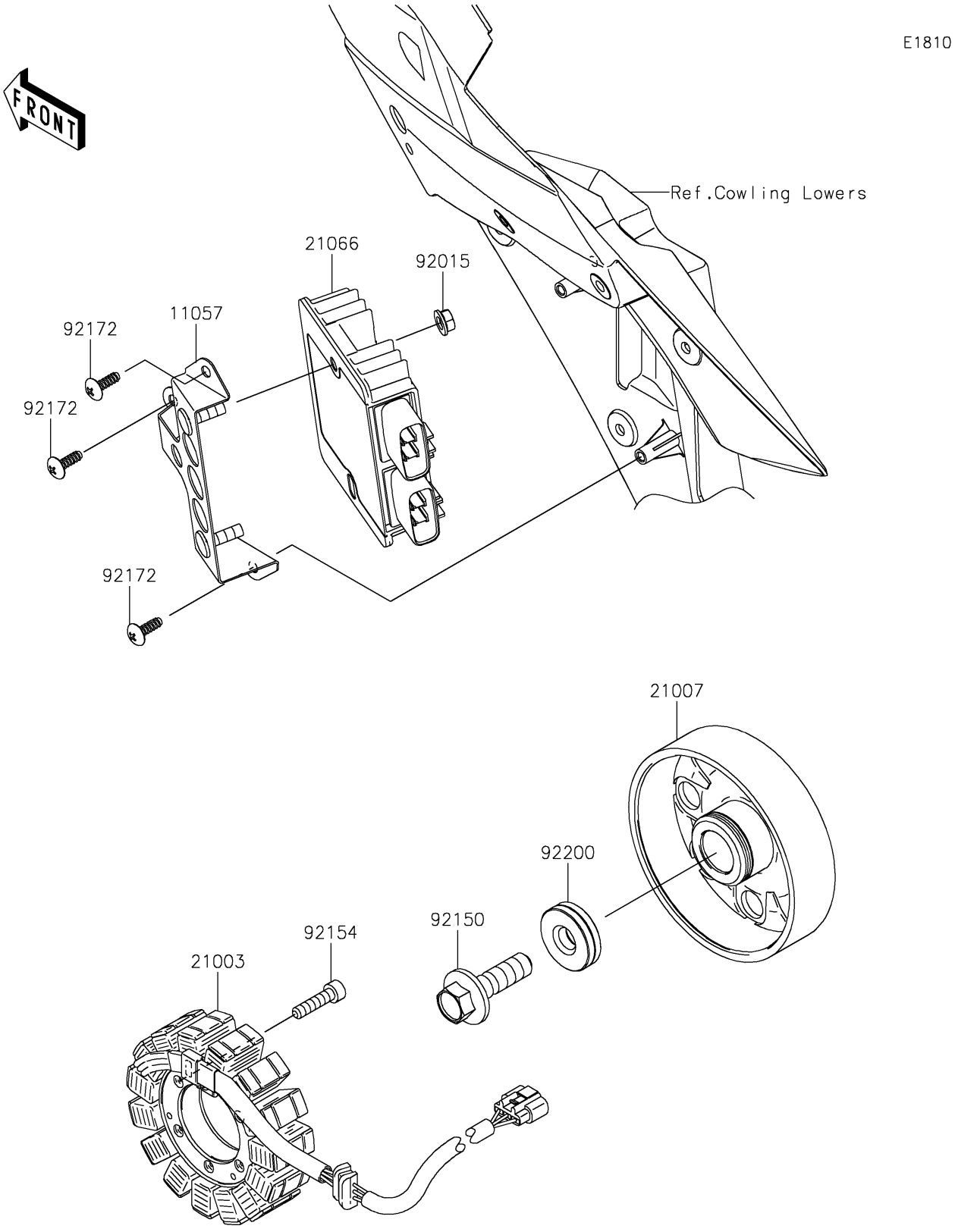

© 2026 Kawasaki Motors Corp., U.S.A.

2024 NINJA H2® ABS

PARTS LIST

Generator

ITEM NAME	PART NUMBER	QUANTITY
BRACKET,REGULATOR (Ref # 11057)	11057-0780	1
STATOR (Ref # 21003)	21003-0169	1
ROTOR (Ref # 21007)	21007-0611	1
REGULATOR-VOLTAGE (Ref # 21066)	21066-0745	1
NUT,FLANGED,6MM (Ref # 92015)	92015-1367	2
BOLT,12X40 (Ref # 92150)	92150-1717	1
BOLT,SOCKET,6X25 (Ref # 92154)	92154-0477	4
SCREW,TAPPING,5X16 (Ref # 92172)	92172-0175	3
WASHER,12X34X9 (Ref # 92200)	92200-0369	1

© 2026 Kawasaki Motors Corp., U.S.A.