2025 NINJA H2® ABS

PARTS DIAGRAM

Fuel Pump

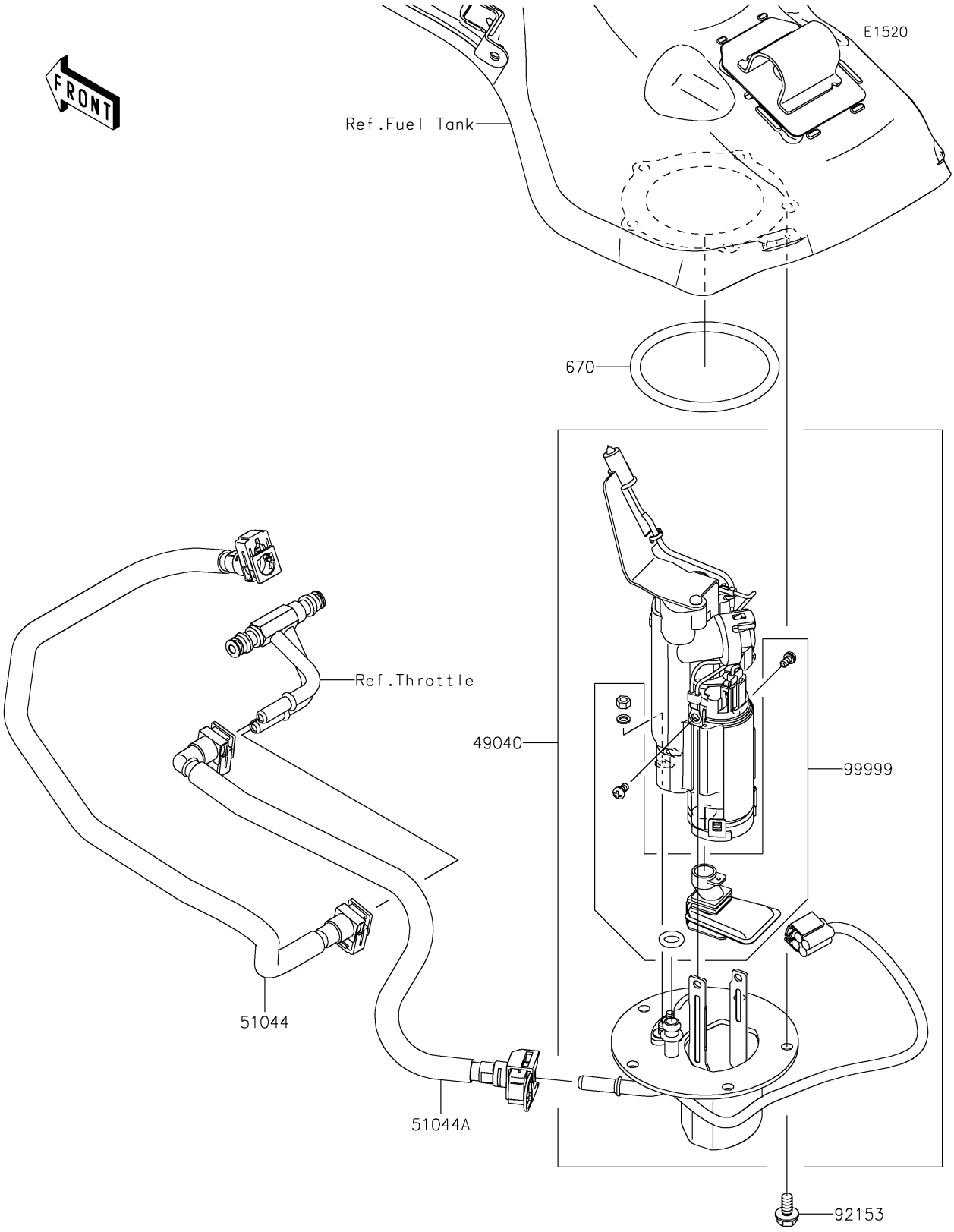

© 2026 Kawasaki Motors Corp., U.S.A.

2025 NINJA H2® ABS

PARTS LIST

Fuel Pump

ITEM NAME	PART NUMBER	QUANTITY
PUMP-FUEL (Ref # 49040)	49040-0785	1
TUBE-ASSY (Ref # 51044)	51044-0860	1
TUBE-ASSY (Ref # 51044A)	51044-0861	1
BOLT,FLANGED,6X12 (Ref # 92153)	92153-1283	5
KIT,FUEL FILTER (Ref # 99999)	99999-0520	1
O RING (Ref # 670)	670E5075	1

© 2026 Kawasaki Motors Corp., U.S.A.