2024 Ninja ZX-14R ABS SE

PARTS DIAGRAM

Oil Pump/Oil Filter

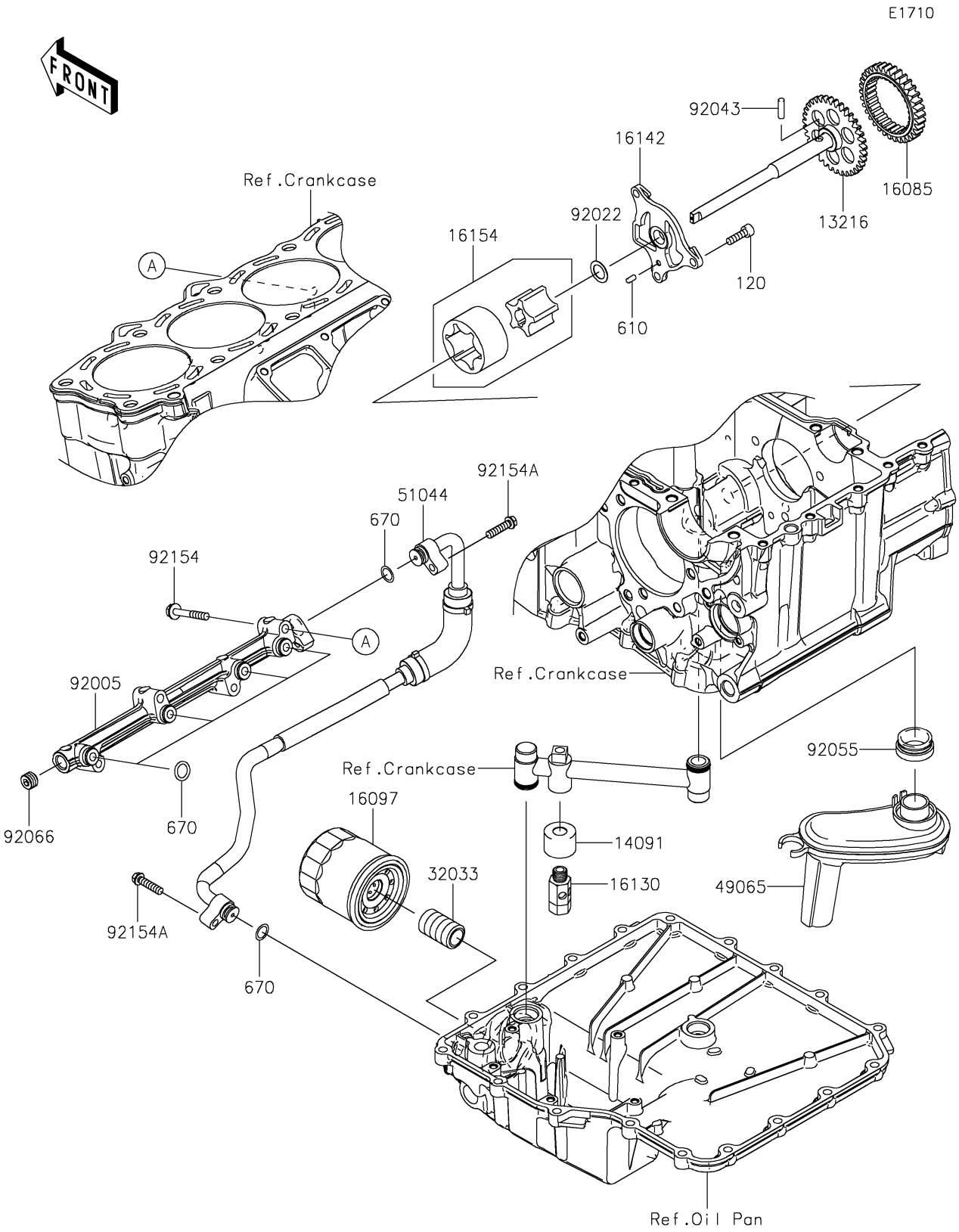

© 2026 Kawasaki Motors Corp., U.S.A.

2024 Ninja ZX-14R ABS SE

PARTS LIST

Oil Pump/Oil Filter

ITEM NAME	PART NUMBER	QUANTITY
GEAR-COMP,OIL COMP (Ref # 13216)	13216-0030	1
COVER,VALVE (Ref # 14091)	14091-0497	1
GEAR,34T (Ref # 16085)	16085-0079	1
FILTER-ASSY-OIL (Ref # 16097)	16097-0008	1
VALVE-ASSY-RELIEF (Ref # 16130)	16130-1059	1
COVER-PUMP (Ref # 16142)	16142-0027	1
ROTOR-PUMP (Ref # 16154)	16154-0047	1
PIPE,OIL FILTER (Ref # 32033)	32033-1535	1
FILTER-OIL (Ref # 49065)	49065-0014	1
TUBE-ASSY (Ref # 51044)	51044-0713	1
FITTING (Ref # 92005)	92005-0752	1
WASHER,13.2X20X0.5 (Ref # 92022)	92022-1224	1
PIN,17.9X5.0 (Ref # 92043)	92043-1444	1
RING-O,OIL FILTER (Ref # 92055)	92055-1503	1
PLUG (Ref # 92066)	92066-3778	1
BOLT,FLANGED,6X40 (Ref # 92154)	92154-1052	4
BOLT,FLANGED,6X25 (Ref # 92154A)	92154-1849	2
BOLT-SOCKET,6X20 (Ref # 120)	120CA0620	3
ROLLER,4X8 (Ref # 610)	610A0408	1
O RING,11MM (Ref # 670)	670D2011	6

© 2026 Kawasaki Motors Corp., U.S.A.