2022 Ninja® ZX™-14R ABS SE

PARTS DIAGRAM

Oil Pan

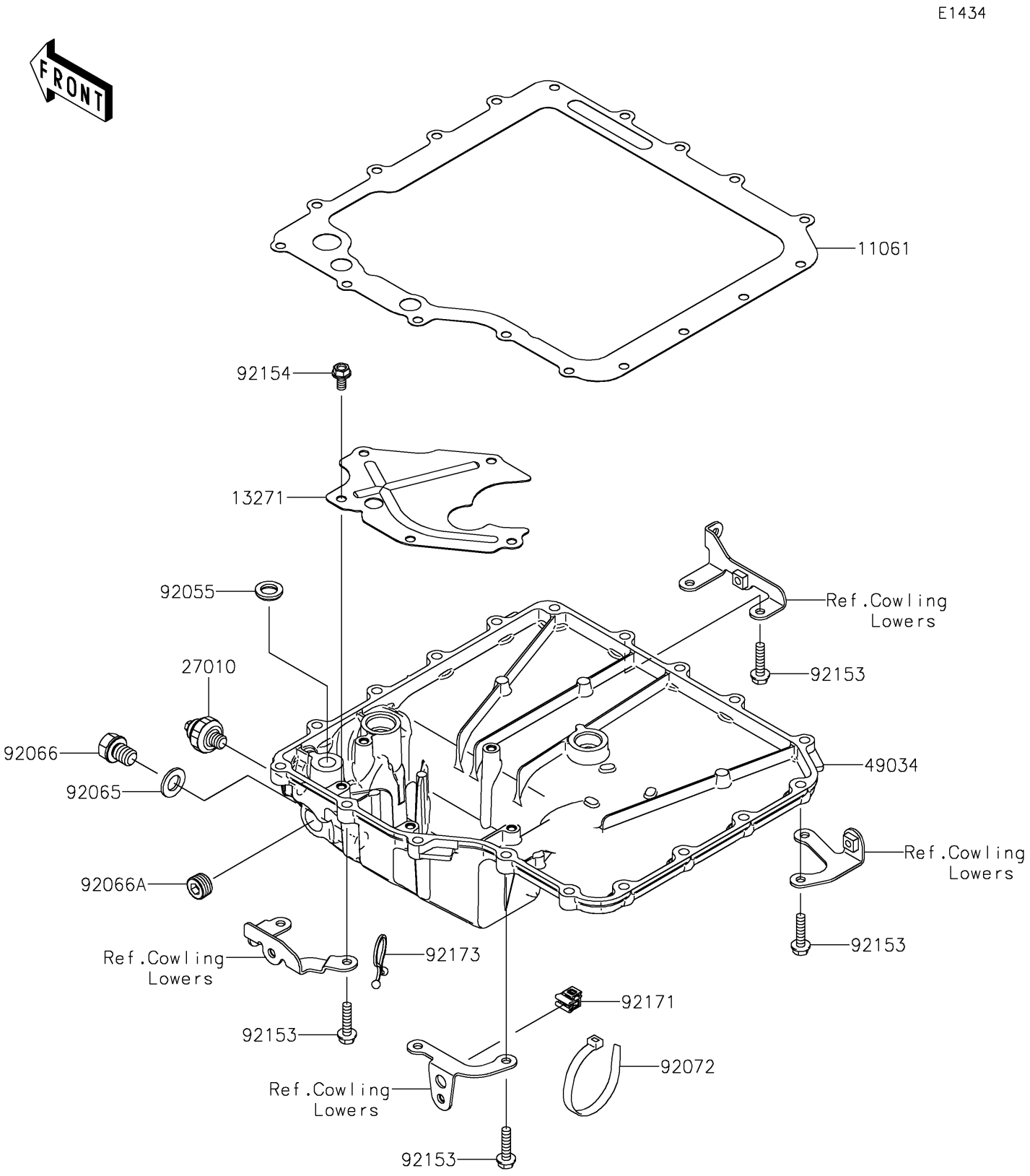

© 2026 Kawasaki Motors Corp., U.S.A.

2022 Ninja® ZX™-14R ABS SE

PARTS LIST

Oil Pan

ITEM NAME	PART NUMBER	QUANTITY
GASKET,OIL PAN (Ref # 11061)	11061-0809	1
PLATE (Ref # 13271)	13271-0868	1
SWITCH,OIL PRESSURE (Ref # 27010)	27010-1313	1
PAN-OIL (Ref # 49034)	49034-0035	1
RING-O,19.5MM (Ref # 92055)	92055-077	1
GASKET,12X22X2 (Ref # 92065)	92065-097	1
PLUG,12X15 (Ref # 92066)	92066-0079	1
PLUG (Ref # 92066A)	92066-0836	1
BAND,L=200 (Ref # 92072)	92072-0106	1
BOLT,FLANGED,6X25 (Ref # 92153)	92153-1569	18
BOLT,FLANGED,6X8 (Ref # 92154)	92154-1846	5
CLAMP (Ref # 92171)	92171-1811	1
CLAMP (Ref # 92173)	92173-0848	1

© 2026 Kawasaki Motors Corp., U.S.A.