2024 Ninja 500

PARTS DIAGRAM

Accessory(Pillion Seat Cover)

F2910E



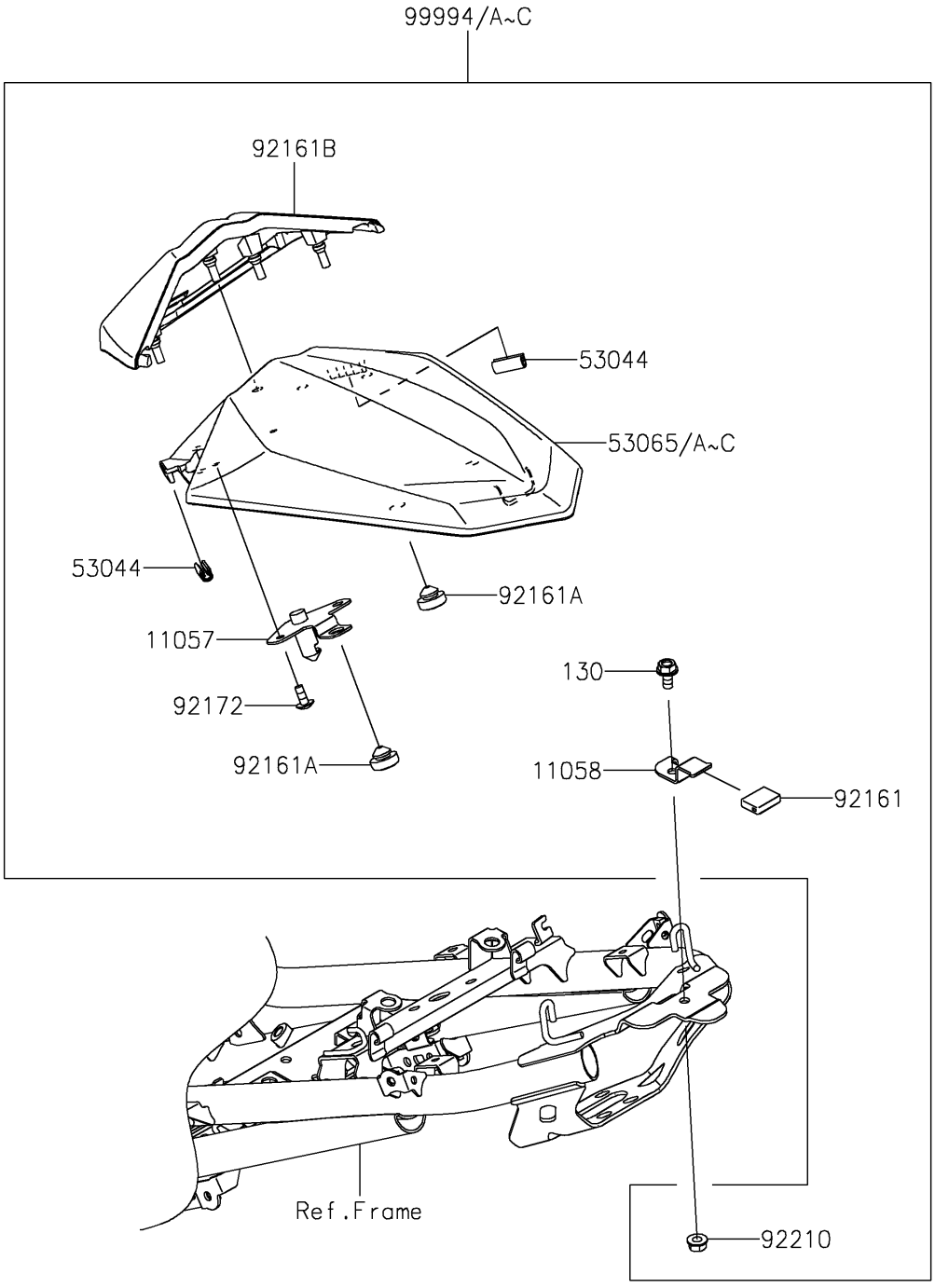

© 2026 Kawasaki Motors Corp., U.S.A.

2024 Ninja 500

PARTS LIST

Accessory(Pillion Seat Cover)

ITEM NAME	PART NUMBER	QUANTITY
BRACKET,COVER FIX (Ref # 11057)	11057-1241	1
BRACKET,SEAT COVER (Ref # 11058)	11058-1212	1
TRIM,L=20 (Ref # 53044)	53044-0021	2
COVER SEAT,P.RED (Ref # 53065)	53065-0080-234	1
COVER SEAT,M.S.BLACK (Ref # 53065C)	53065-0080-660	1
DAMPER,15X21X5.5 (Ref # 92161)	92161-1472	1
DAMPER,9.5X18X6 (Ref # 92161A)	92161-1473	3
DAMPER,COVER SEAT (Ref # 92161B)	92161-2525	1
SCREW,5X12 (Ref # 92172)	92172-0821	2
NUT,FLANGED,6MM (Ref # 92210)	92210-0368	1
PILLION SEAT COVER,P.RED (Ref # 99994)	99994-2003-234	1
PILLION SEAT COVER,M.S.BLACK (Ref # 99994C)	99994-2003-660	1
BOLT-FLANGED,6X12 (Ref # 130)	130BA0612	1

© 2026 Kawasaki Motors Corp., U.S.A.