2025 Ninja 500

PARTS DIAGRAM

Labels

F2860

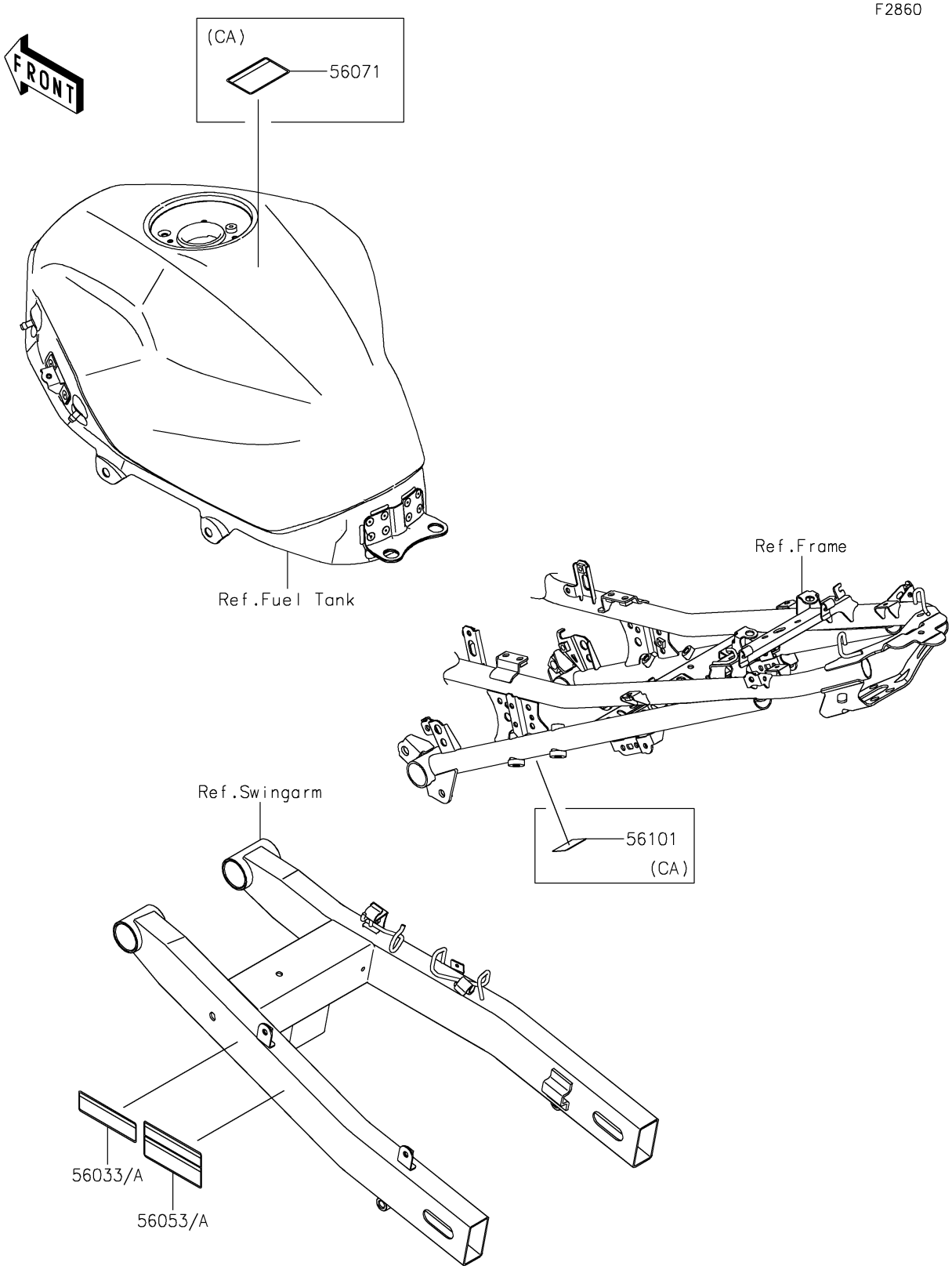

© 2026 Kawasaki Motors Corp., U.S.A.

2025 Ninja 500

PARTS LIST

Labels

ITEM NAME	PART NUMBER	QUANTITY
LABEL-MANUAL,CHAIN (Ref # 56033)	56033-0850	1
LABEL-SPECIFICATION,TIRE&LOAD (Ref # 56053)	56053-1580	1

© 2026 Kawasaki Motors Corp., U.S.A.