2025 Ninja 500

PARTS DIAGRAM

Owner's Tools

F2810

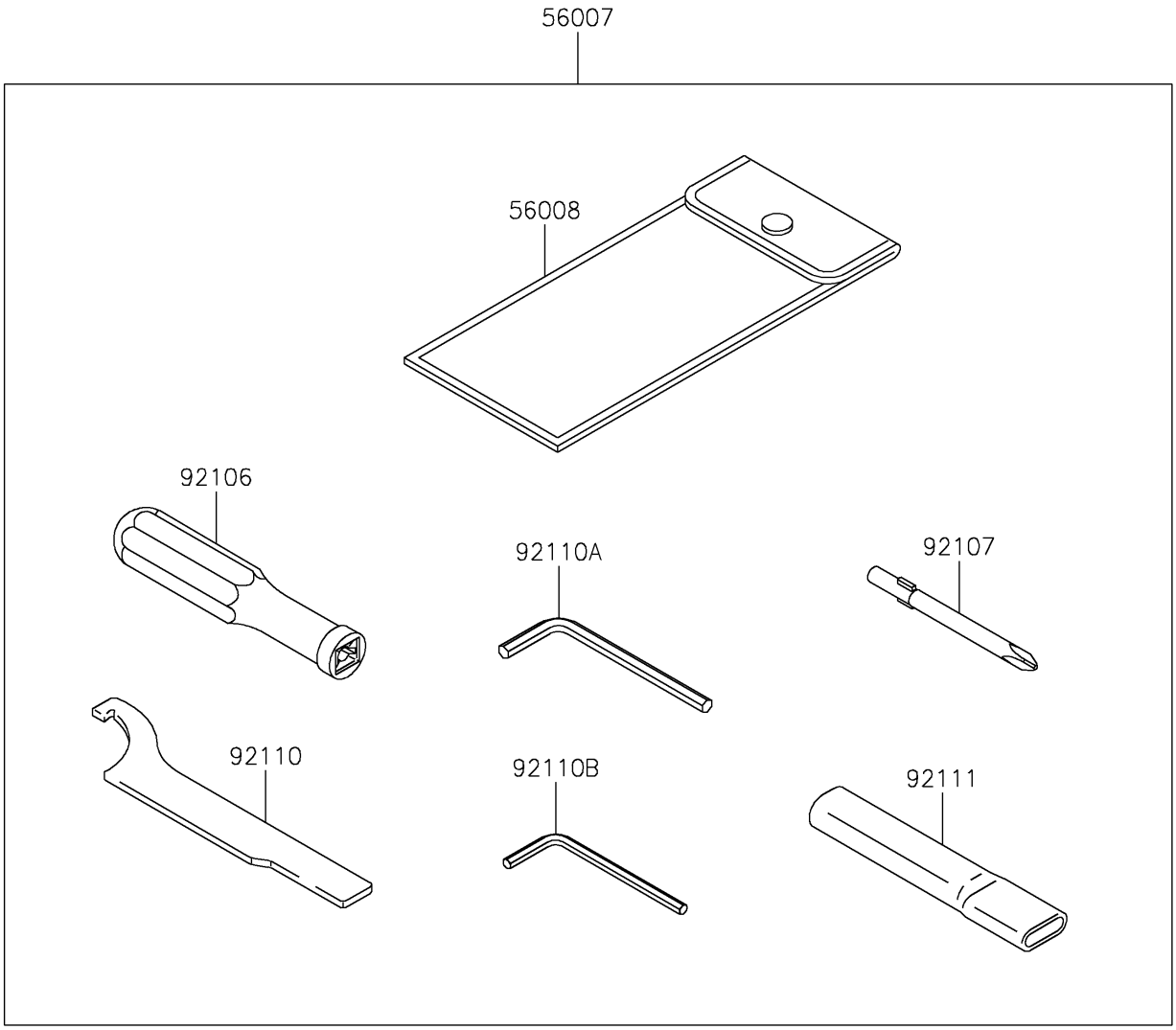

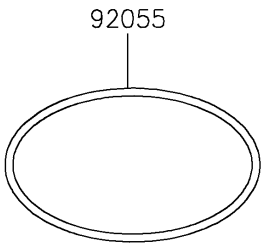

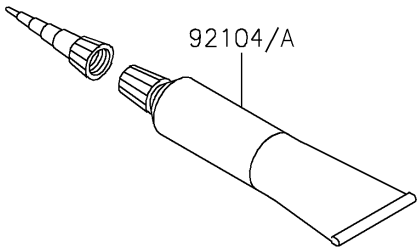

© 2026 Kawasaki Motors Corp., U.S.A.

2025 Ninja 500

PARTS LIST

Owner's Tools

ITEM NAME	PART NUMBER	QUANTITY
TOOL-KIT (Ref # 56007)	56007-0191	1
BAG,TOOL (Ref # 56008)	56008-0036	1
RING-O,90MM (Ref # 92055)	92055-0955	1
GASKET-LIQUID,TB1211F,CLEAR (Ref # 92104)	92104-0004	1
GASKET-LIQUID,TB1216B,BLACK (Ref # 92104A)	92104-1064	1
GRIP-SCREW DRIVER (Ref # 92106)	92106-0004	1
TOOL-DRIVER,#2PHILLIPS (Ref # 92107)	92107-0020	1
TOOL-WRENCH,HOOK (Ref # 92110)	92110-0040	1
TOOL-WRENCH,ALLEN,5MM (Ref # 92110A)	92110-0566	1
TOOL-WRENCH,ALLEN,4MM (Ref # 92110B)	92110-0567	1
TOOL-BAR,WRENCH (Ref # 92111)	92111-0008	1

© 2026 Kawasaki Motors Corp., U.S.A.