2025 Ninja 500

PARTS DIAGRAM

Turn Signals

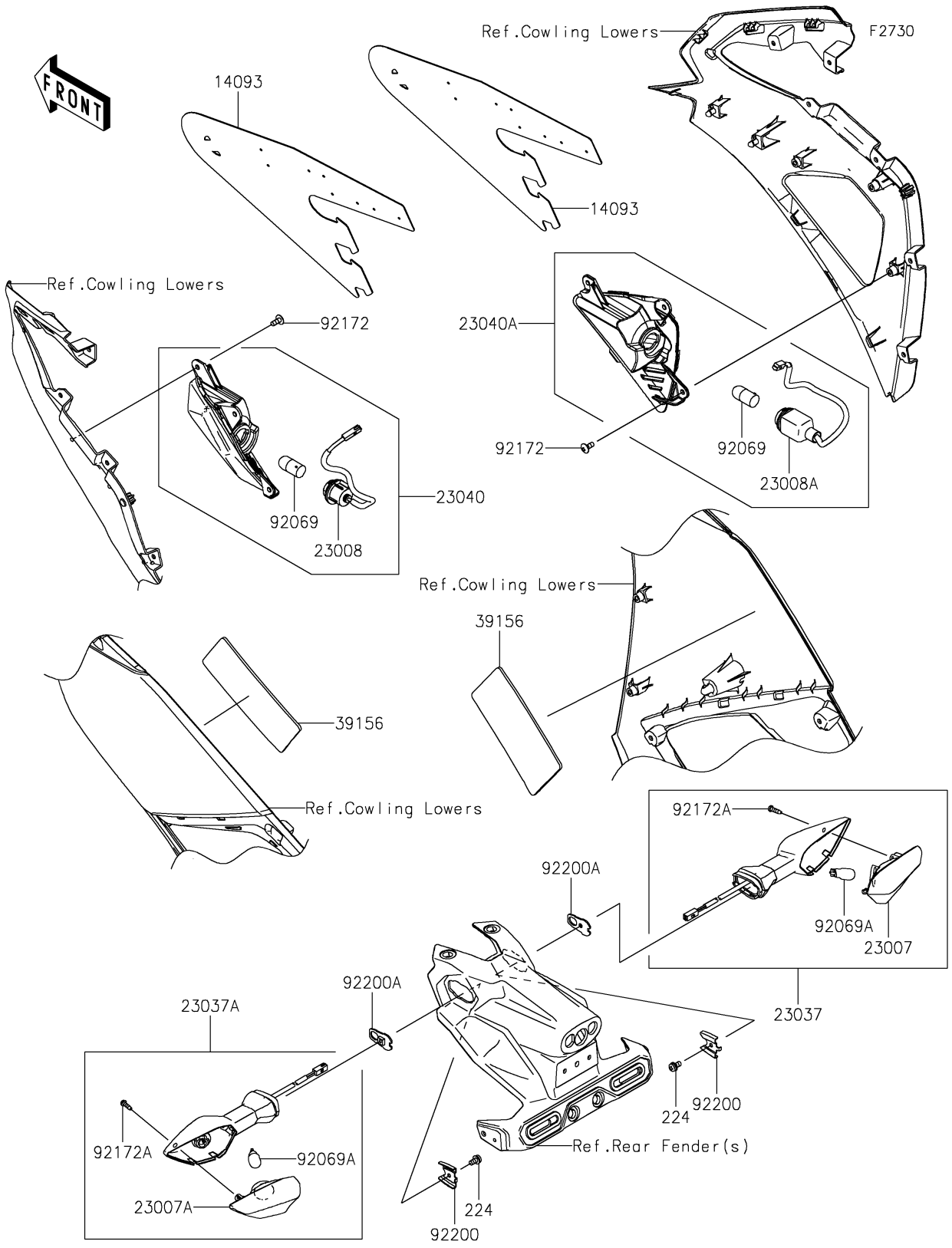

© 2026 Kawasaki Motors Corp., U.S.A.

2025 Ninja 500

PARTS LIST

Turn Signals

ITEM NAME	PART NUMBER	QUANTITY
COVER,SIGNAL LAMP (Ref # 14093)	14093-1543	2
LENS-COMP (Ref # 23007)	23007-0228	1
LENS-COMP (Ref # 23007A)	23007-0229	1
SOCKET-ASSY,BLACK (Ref # 23008)	23008-0191	1
SOCKET-ASSY,GRAY (Ref # 23008A)	23008-0192	1
LAMP-ASSY-SIGNAL,RR RH (Ref # 23037)	23037-0537	1
LAMP-ASSY-SIGNAL,RR LH (Ref # 23037A)	23037-0538	1
LAMP-SIGNAL,FR LH (Ref # 23040)	23040-0153	1
LAMP-SIGNAL,FR RH (Ref # 23040A)	23040-0154	1
PAD,140X70X3 (Ref # 39156)	39156-2951	2
BULB,12V 10W (Ref # 92069)	92069-0058	2
BULB,12V 10W (Ref # 92069A)	92069-0090	2
SCREW,5X12 (Ref # 92172)	92172-0821	6
SCREW,4X14 (Ref # 92172A)	92172-1117	2
WASHER (Ref # 92200)	92200-0855	2
WASHER,NUT,4MM (Ref # 92200A)	92200-2222	2
SCREW-PAN-WP-CROS,4X8 (Ref # 224)	224AB0408	2

© 2026 Kawasaki Motors Corp., U.S.A.