2025 Ninja 500

PARTS DIAGRAM

Seat

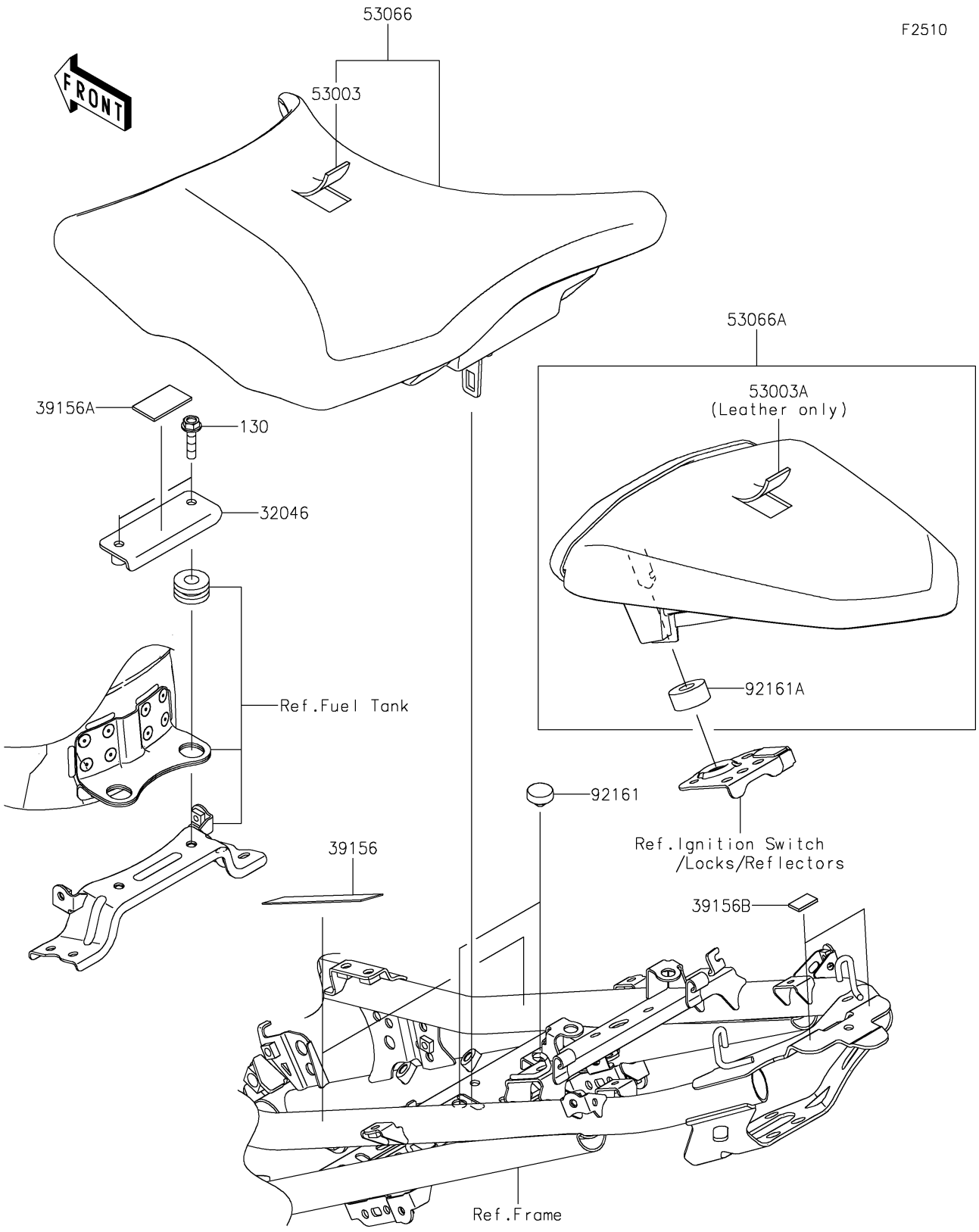

© 2026 Kawasaki Motors Corp., U.S.A.

2025 Ninja 500

PARTS LIST

Seat

ITEM NAME	PART NUMBER	QUANTITY
BRACKET-SEAT (Ref # 32046)	32046-0423	1
PAD,35X75X1 (Ref # 39156)	39156-2383	2
PAD,36X21X2 (Ref # 39156A)	39156-2882	1
PAD,18X10X2 (Ref # 39156B)	39156-2952	2
LEATHER,BLACK (Ref # 53003)	53003-0682-MA	1
LEATHER,BLACK (Ref # 53003A)	53003-0686-MA	1
SEAT-ASSY,FR,BLACK (Ref # 53066)	53066-0896-MA	1
SEAT-ASSY,RR,BLACK+BLK (Ref # 53066A)	53066-0898-12Y	1
DAMPER,9.5X18X6 (Ref # 92161)	92161-1473	2
DAMPER (Ref # 92161A)	92161-2640	1
BOLT-FLANGED,6X25 (Ref # 130)	130CC0625	2

© 2026 Kawasaki Motors Corp., U.S.A.