2025 Ninja 500

PARTS DIAGRAM

Front Wheel

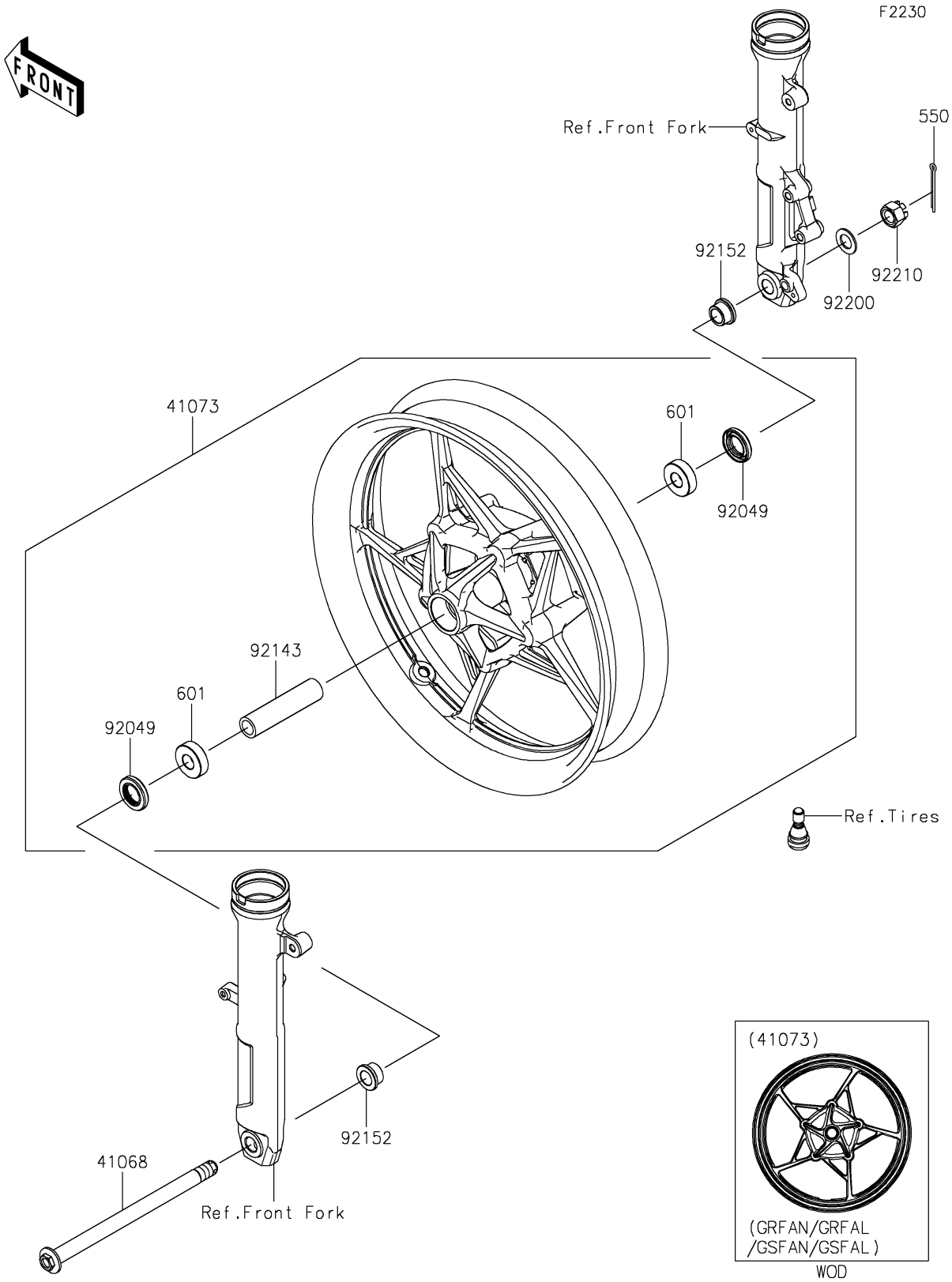

© 2026 Kawasaki Motors Corp., U.S.A.

2025 Ninja 500

PARTS LIST

Front Wheel

ITEM NAME	PART NUMBER	QUANTITY
AXLE,FR (Ref # 41068)	41068-0643	1
WHEEL-ASSY,FR,G.BLACK (Ref # 41073)	41073-0752-QT	1
SEAL-OIL,23X40X7 (Ref # 92049)	92049-0801	2
COLLAR,17.2X25X105 (Ref # 92143)	92143-1124	1
COLLAR,17X30X15.5 (Ref # 92152)	92152-2386	2
WASHER,17.3X30X2 (Ref # 92200)	92200-1916	1
NUT,CASTLE,16X19 (Ref # 92210)	92210-1585	1
PIN-COTTER,4.0X35 (Ref # 550)	550AA4035	1
BEARING-BALL,#6203UUC3 (Ref # 601)	601B6203UU	2

© 2026 Kawasaki Motors Corp., U.S.A.