2024 Ninja 500

PARTS DIAGRAM

Starter Motor

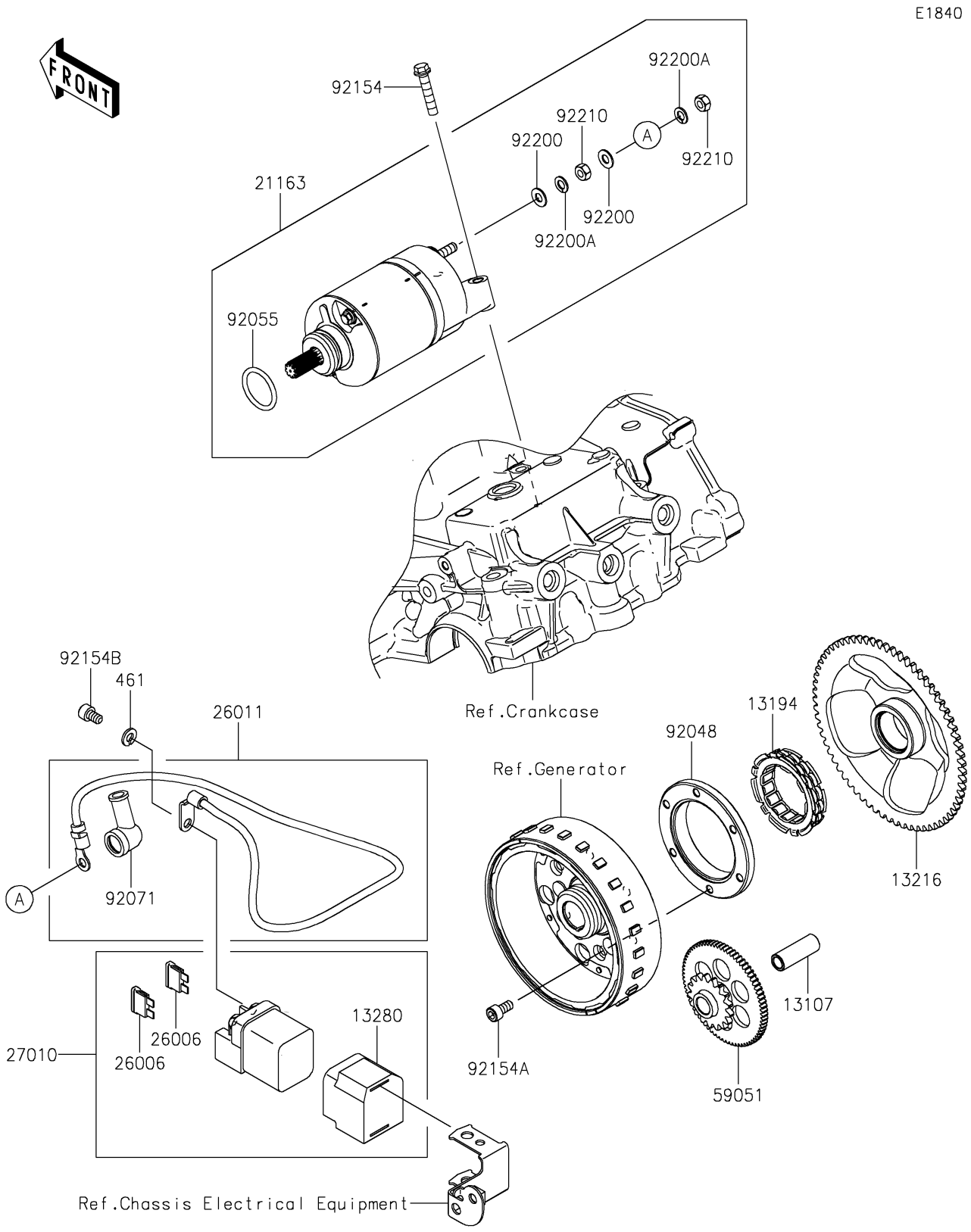

© 2026 Kawasaki Motors Corp., U.S.A.

2024 Ninja 500

PARTS LIST

Starter Motor

ITEM NAME	PART NUMBER	QUANTITY
SHAFT,IDLER (Ref # 13107)	13107-0861	1
CLUTCH-ONEWAY (Ref # 13194)	13194-1096	1
GEAR-COMP,ONEWAY CLUTCH,67T (Ref # 13216)	13216-0895	1
HOLDER (Ref # 13280)	13280-0301	1
STARTER-ELECTRIC (Ref # 21163)	21163-0794	1
FUSE,BLADE,30A,GREEN (Ref # 26006)	26006-1006	2
WIRE-LEAD,STARTER (Ref # 26011)	26011-1867	1
SWITCH,MAGNETIC (Ref # 27010)	27010-0099	1
GEAR-SPUR,IDLER (Ref # 59051)	59051-0799	1
RACE (Ref # 92048)	92048-0024	1
RING-O (Ref # 92055)	92055-0822	1
GROMMET (Ref # 92071)	92071-0787	1
BOLT,FLANGED,6X30 (Ref # 92154)	92154-1773	2
BOLT,SOCKET,6X12 (Ref # 92154A)	92154-1889	6
BOLT,SOCKET,6X10 (Ref # 92154B)	92154-4401	2
WASHER (Ref # 92200)	92200-1678	2
WASHER (Ref # 92200A)	92200-1679	2
NUT (Ref # 92210)	92210-1664	2
WASHER-SPRING,6MM (Ref # 461)	461DA0600	2

© 2026 Kawasaki Motors Corp., U.S.A.