2025 Ninja 500

PARTS DIAGRAM

Generator

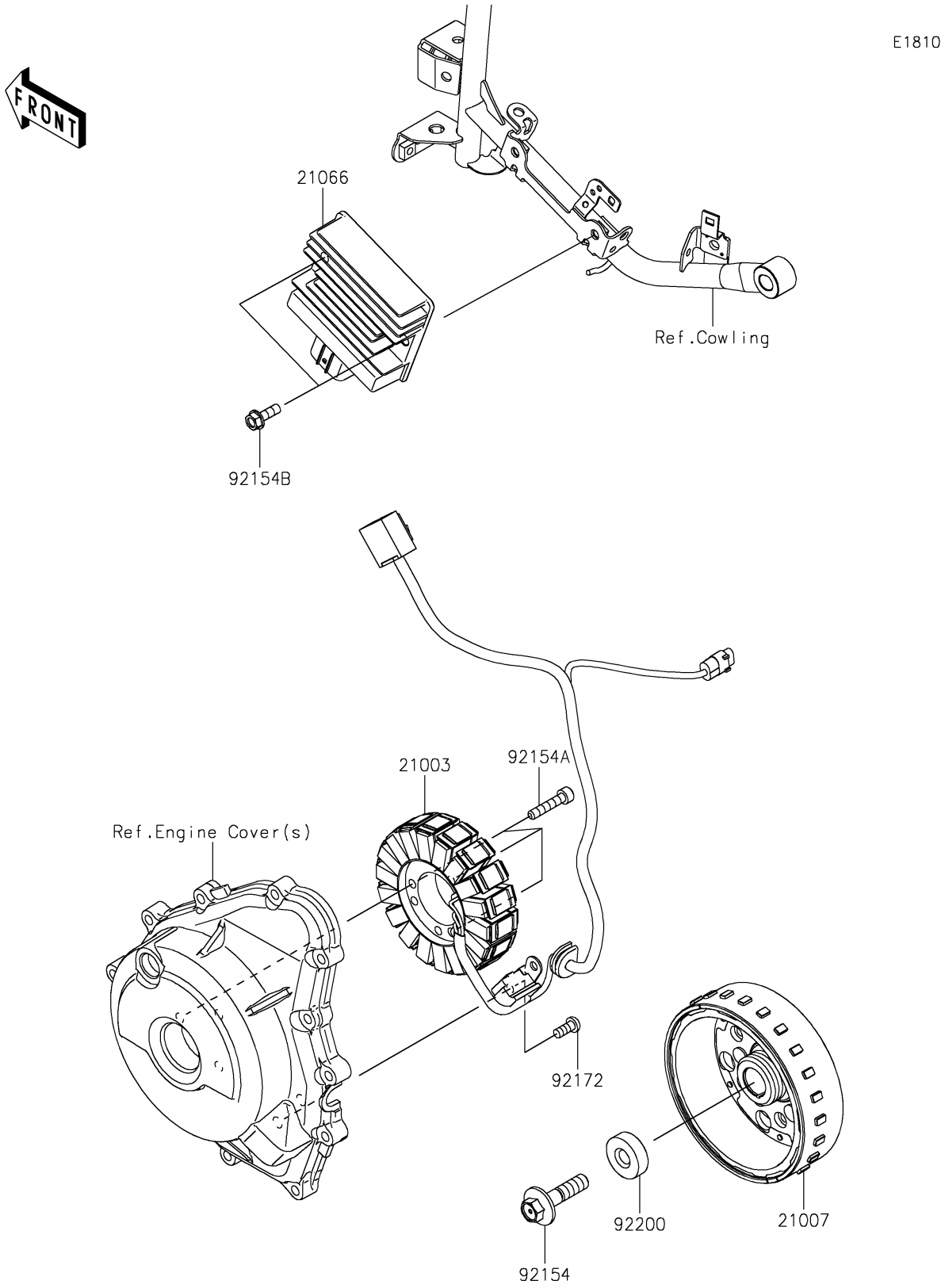

© 2026 Kawasaki Motors Corp., U.S.A.

2025 Ninja 500

PARTS LIST

Generator

ITEM NAME	PART NUMBER	QUANTITY
STATOR (Ref # 21003)	21003-0178	1
ROTOR (Ref # 21007)	21007-0736	1
REGULATOR-VOLTAGE (Ref # 21066)	21066-0761	1
BOLT,FLANGED,10X40 (Ref # 92154)	92154-2341	1
BOLT,SOCKET,6X30 (Ref # 92154A)	92154-2820	3
BOLT,FLANGED,6X18 (Ref # 92154B)	92154-2896	2
SCREW,6X14 (Ref # 92172)	92172-1212	2
WASHER,10X30X9 (Ref # 92200)	92200-0790	1

© 2026 Kawasaki Motors Corp., U.S.A.