# 2010 Brute Force 650 4x4i (Canada Only)

Kawasaki
Let the Good Times Roll®

## PARTS DIAGRAM

### Rear Hub

F2240

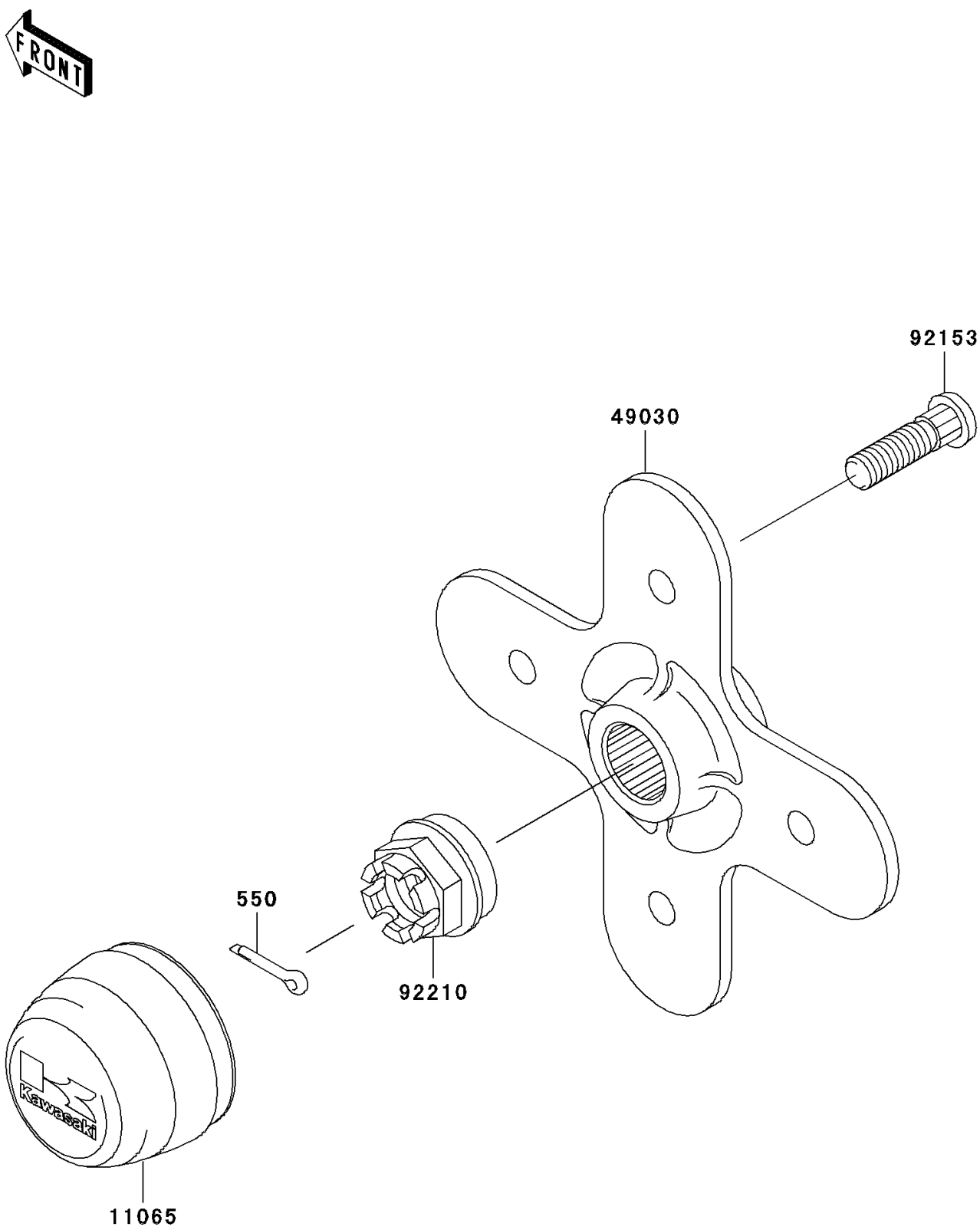


© 2026 Kawasaki Motors Corp., U.S.A.

# 2010 Brute Force 650 4x4i (Canada Only)

Kawasaki
Let the Good Times Roll®

## PARTS LIST

### Rear Hub

| ITEM NAME | PART NUMBER | QUANTITY |
|---|---|---|
| PIN-COTTER,4.0X25 (Ref # 550) | 550AA4025 | 2 |
| CAP,WHEEL (Ref # 11065) | 11065-0108 | 2 |
| HUB,RR (Ref # 49030) | 49030-0009 | 2 |
| BOLT,10X36.5 (Ref # 92153) | 92153-0890 | 8 |
| NUT,CASTLE,20MM (Ref # 92210) | 92210-1381 | 2 |

© 2026 Kawasaki Motors Corp., U.S.A.