2025 Versys 650

PARTS DIAGRAM

Decals(White)(CA)

Kawasaki
Let the Good Times Roll®

F2861A

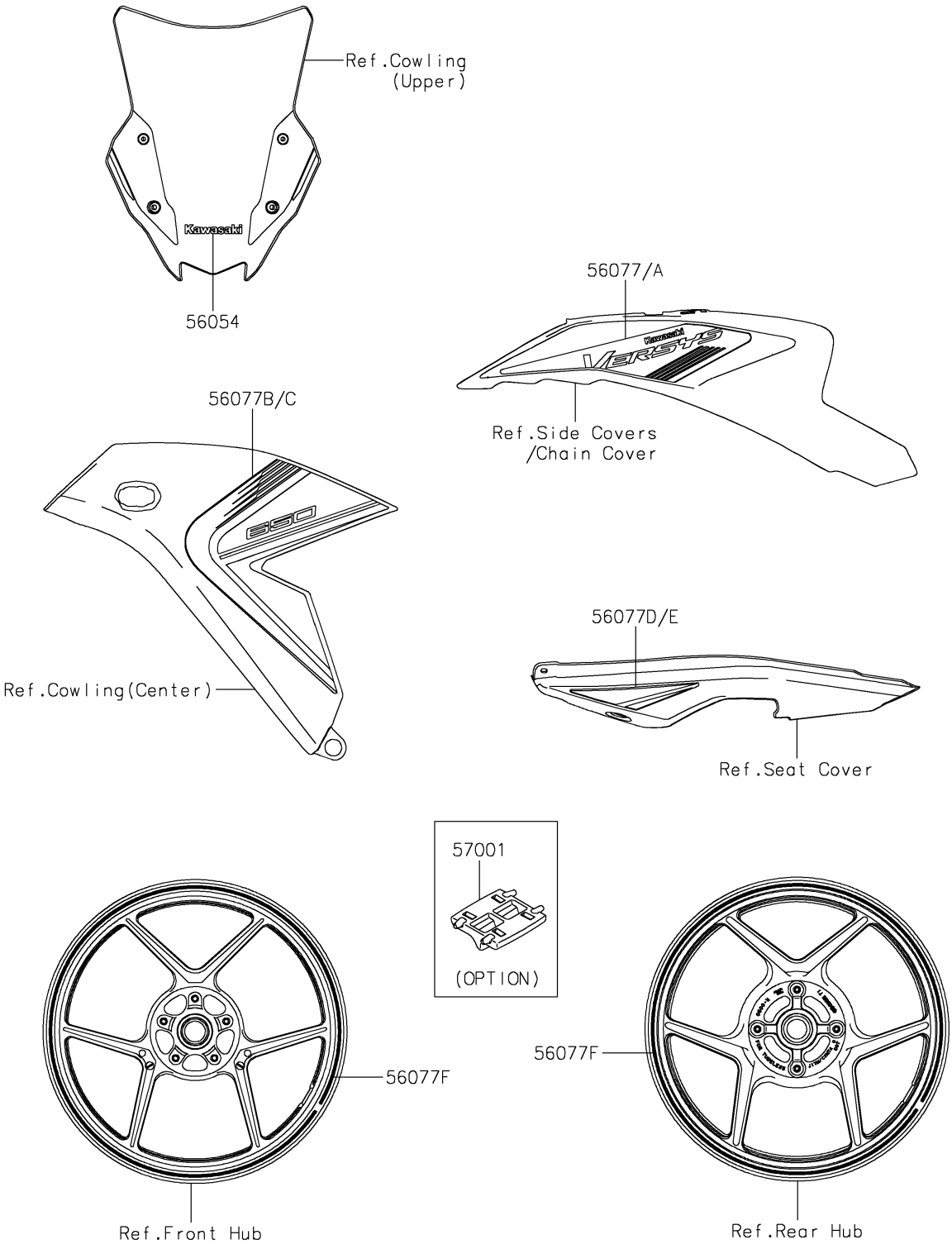

© 2026 Kawasaki Motors Corp., U.S.A.

2025 Versys 650

PARTS LIST

Decals(White)(CA)

ITEM NAME	PART NUMBER	QUANTITY
MARK,WINDSHIELD,KAWASAKI (Ref # 56054)	56054-2177	1
PATTERN,TANK COWL.,LH (Ref # 56077)	56077-2161	1
PATTERN,TANK COWL.,RH (Ref # 56077A)	56077-2162	1
PATTERN,SIDE COWL.,LH (Ref # 56077B)	56077-2163	1
PATTERN,SIDE COWL.,RH (Ref # 56077C)	56077-2164	1
PATTERN,TAIL COVER,LH (Ref # 56077D)	56077-2165	1
PATTERN,TAIL COVER,RH (Ref # 56077E)	56077-2166	1
PATTERN,WHEEL,BLUE/BLK,4X1353 (Ref # 56077F)	56077-2167	4
RIM STRIPE APPLICATOR (Ref # 57001)	57001-1752	AR

© 2026 Kawasaki Motors Corp., U.S.A.