2025 Versys 650

PARTS DIAGRAM

Meter(s)

F2530

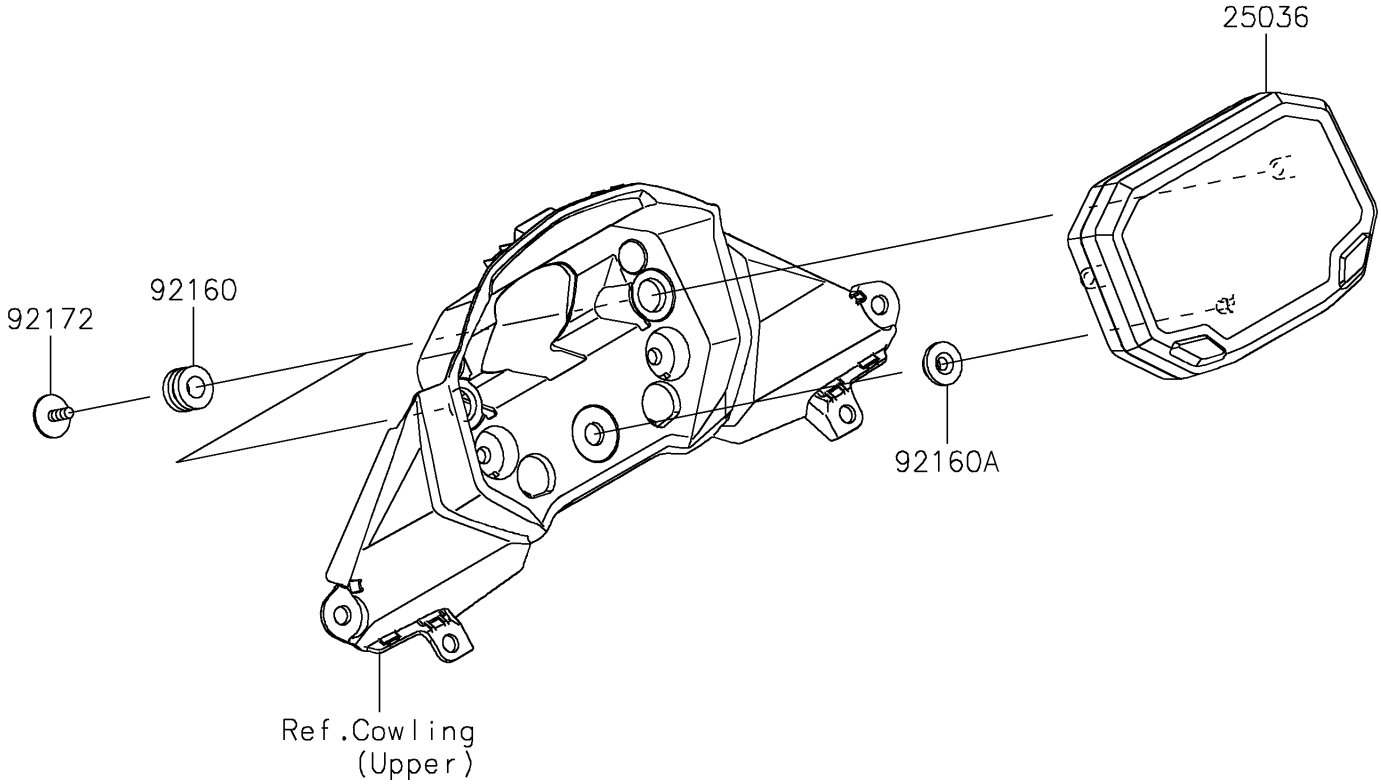

© 2026 Kawasaki Motors Corp., U.S.A.

2025 Versys 650

PARTS LIST

Meter(s)

ITEM NAME	PART NUMBER	QUANTITY

© 2026 Kawasaki Motors Corp., U.S.A.