2025 Versys 650

PARTS DIAGRAM

Rear Master Cylinder

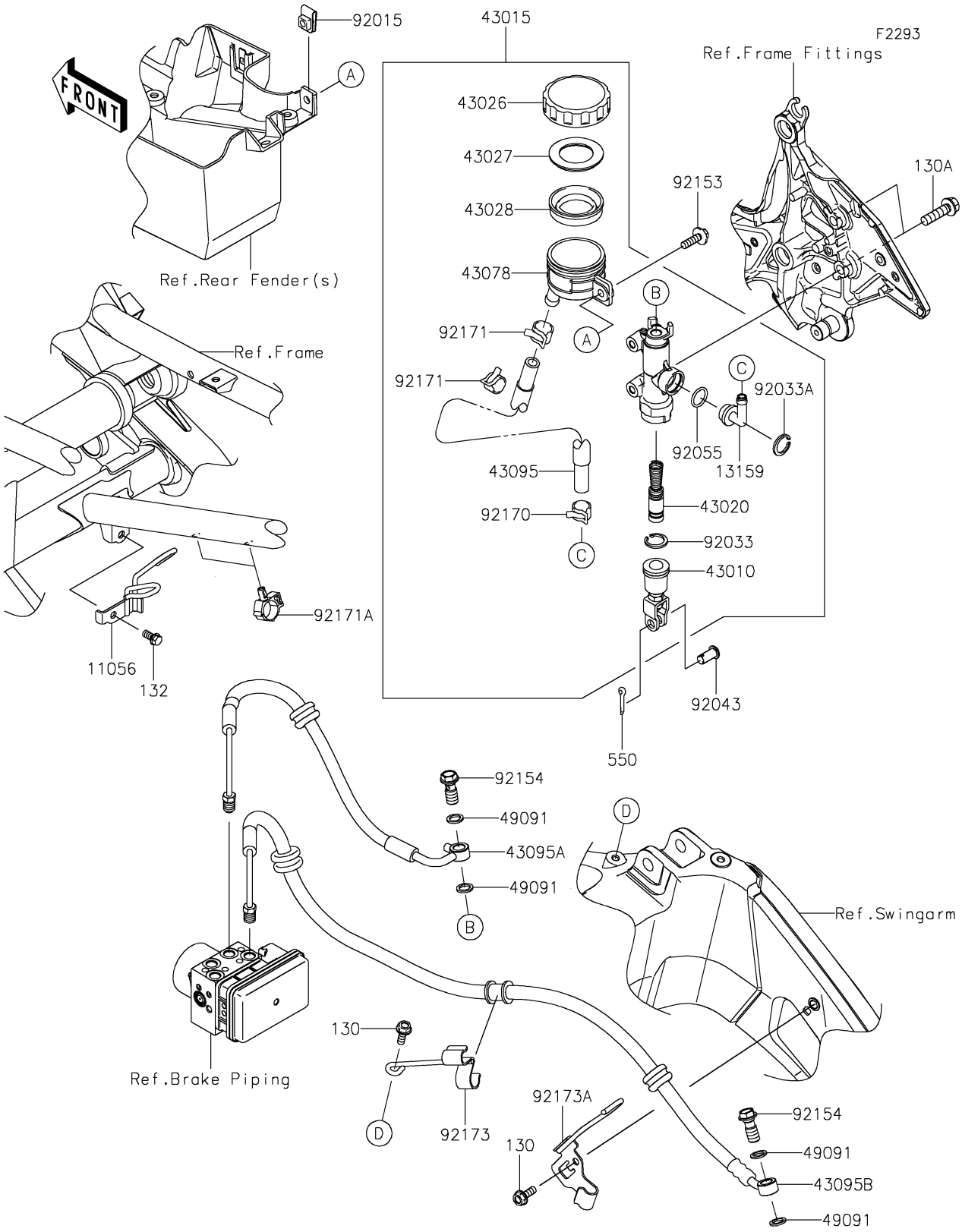

© 2026 Kawasaki Motors Corp., U.S.A.

2025 Versys 650

PARTS LIST

Rear Master Cylinder

ITEM NAME	PART NUMBER	QUANTITY
BRACKET,FRAME COMP (Ref # 11056)	11056-4072	1
CONNECTOR (Ref # 13159)	13159-1056	1
ROD-ASSY-BRAKE (Ref # 43010)	43010-1062	1
CYLINDER-ASSY-MASTER,RR (Ref # 43015)	43015-0602	1
PISTON-COMP-BRAKE (Ref # 43020)	43020-1094	1
CAP-BRAKE (Ref # 43026)	43026-1051	1
PLATE-DIAPHRAGM (Ref # 43027)	43027-1051	1
DIAPHRAGM,MASTER CYLINDER (Ref # 43028)	43028-1057	1
RESERVOIR,RR MASTER CYLINDER (Ref # 43078)	43078-1082	1
HOSE-BRAKE,500MM (Ref # 43095)	43095-0842	1
HOSE-BRAKE,RR M/C-ABS UNIT (Ref # 43095A)	43095-1961	1
HOSE-BRAKE,ABS UNIT-RR CAL. (Ref # 43095B)	43095-1962	1
WASHER-SEAL,10.1X14.5X1.5 (Ref # 49091)	49091-0001	4
NUT,6MM (Ref # 92015)	92015-1602	1
RING-SNAP,20.9X24.6X1.2 (Ref # 92033)	92033-0079	1
RING-SNAP,20.5MM (Ref # 92033A)	92033-1186	1
PIN (Ref # 92043)	92043-0182	1
RING-O,14.8X2.4 (Ref # 92055)	92055-0741	1
BOLT,6X22 (Ref # 92153)	92153-0725	1
BOLT,FLANGED,10X23 (Ref # 92154)	92154-0732	2
CLAMP,HOSE (Ref # 92170)	92170-1091	1
CLAMP,HOSE (Ref # 92171)	92171-0463	2
CLAMP (Ref # 92171A)	92171-0955	2
CLAMP,SWING ARM,FR (Ref # 92173)	92173-1290	1
CLAMP,SWING ARM (Ref # 92173A)	92173-1291	1
BOLT-FLANGED,6X16 (Ref # 130)	130BB0616	2
BOLT-FLANGED,8X30 (Ref # 130A)	130CA0830	2
BOLT-FLANGED-SMALL,6X12 (Ref # 132)	132BB0612	1
PIN-COTTER,2.0X15 (Ref # 550)	550AA2015	1

© 2026 Kawasaki Motors Corp., U.S.A.