2025 Versys 650

PARTS DIAGRAM

Frame Fittings

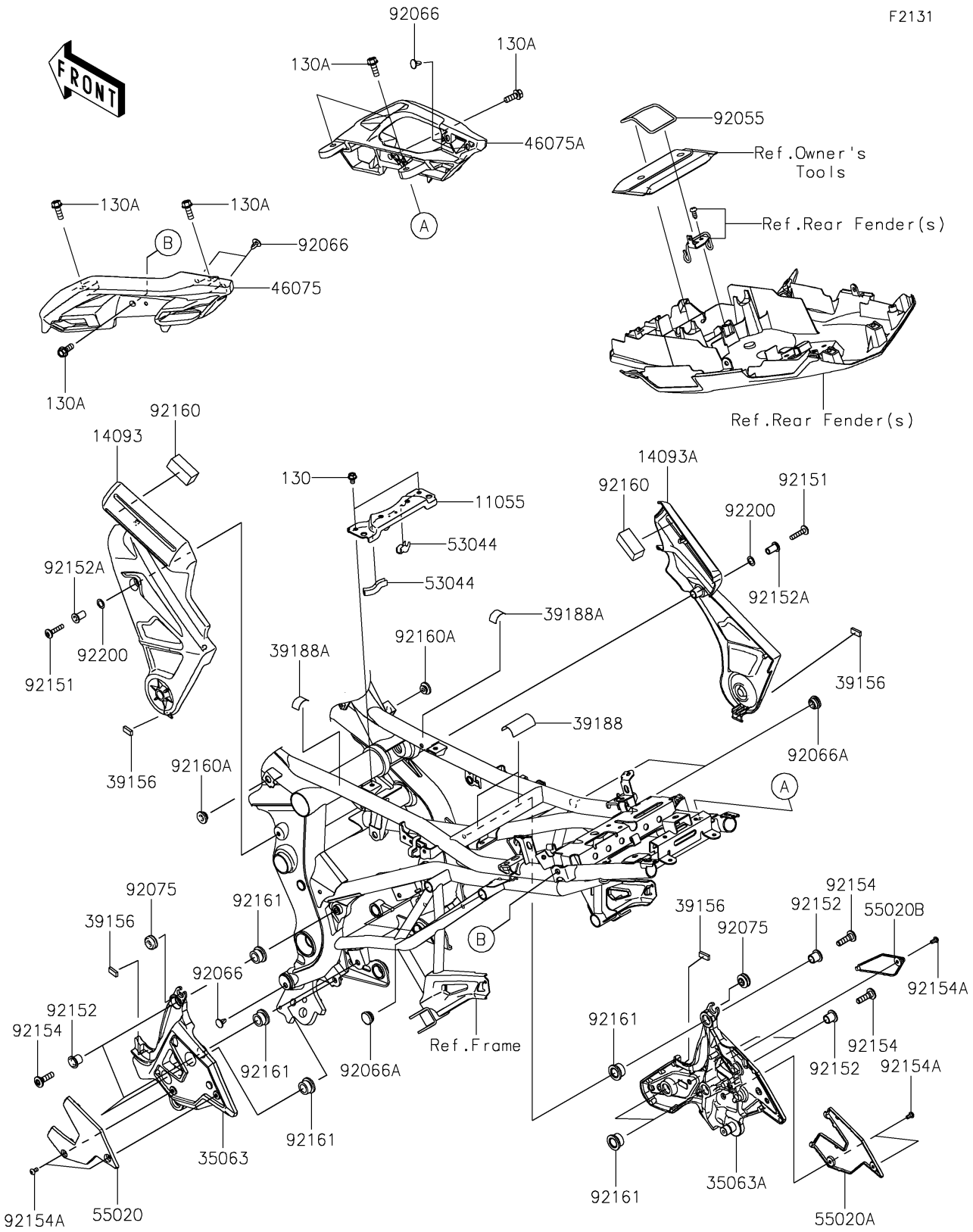

© 2026 Kawasaki Motors Corp., U.S.A.

2025 Versys 650

PARTS LIST

Frame Fittings

ITEM NAME	PART NUMBER	QUANTITY
BRACKET,FUEL TANK (Ref # 11055)	11055-1929	1
COVER,PIVOT,LH,F.S.BLACK (Ref # 14093)	14093-0263-18T	1
COVER,PIVOT,RH,F.S.BLACK (Ref # 14093A)	14093-0264-18T	1
STAY,STEP,LH,F.S.BLACK (Ref # 35063)	35063-0967-18R	1
STAY,STEP,RH,F.S.BLACK (Ref # 35063A)	35063-1376-18R	1
PAD,18X8X4 (Ref # 39156)	39156-1921	4
TAPE,40X50 (Ref # 39188)	39188-0049	2
TAPE,15X30 (Ref # 39188A)	39188-0590	2
GRIP,TANDEM,LH,F.S.BLACK (Ref # 46075)	46075-0593-18R	1
GRIP,TANDEM,RH,F.S.BLACK (Ref # 46075A)	46075-0594-18R	1
TRIM,L=40 (Ref # 53044)	53044-1174	2
GUARD,STEP,LH (Ref # 55020)	55020-0978	1
GUARD,STEP,RH,RR (Ref # 55020A)	55020-0979	1
GUARD,STEP,RH,FR (Ref # 55020B)	55020-0980	1
RING-O,62.6X3.5 (Ref # 92055)	92055-0798	1
PLUG (Ref # 92066)	92066-1103	5
PLUG (Ref # 92066A)	92066-1306	4
DAMPER (Ref # 92075)	92075-1067	2
BOLT,SOCKET,6X30 (Ref # 92151)	92151-1605	2
COLLAR,10.6X13.8X15 (Ref # 92152)	92152-0976	6
COLLAR,6.5X10X19.1 (Ref # 92152A)	92152-2764	2
BOLT,SOCKET,8X30 (Ref # 92154)	92154-0842	6
BOLT,SOCKET,5X10 (Ref # 92154A)	92154-2801	5
DAMPER (Ref # 92160)	92160-1272	2
DAMPER (Ref # 92160A)	92160-1613	2
DAMPER,14X26X13.9 (Ref # 92161)	92161-0946	6
WASHER,10.4X15.9X0.5 (Ref # 92200)	92200-0157	2
BOLT-FLANGED,6X10 (Ref # 130)	130BA0610	2
BOLT-FLANGED,8X22 (Ref # 130A)	130BA0822	6

© 2026 Kawasaki Motors Corp., U.S.A.