2000 Ninja® ZX™-6R

PARTS DIAGRAM

Crankcase

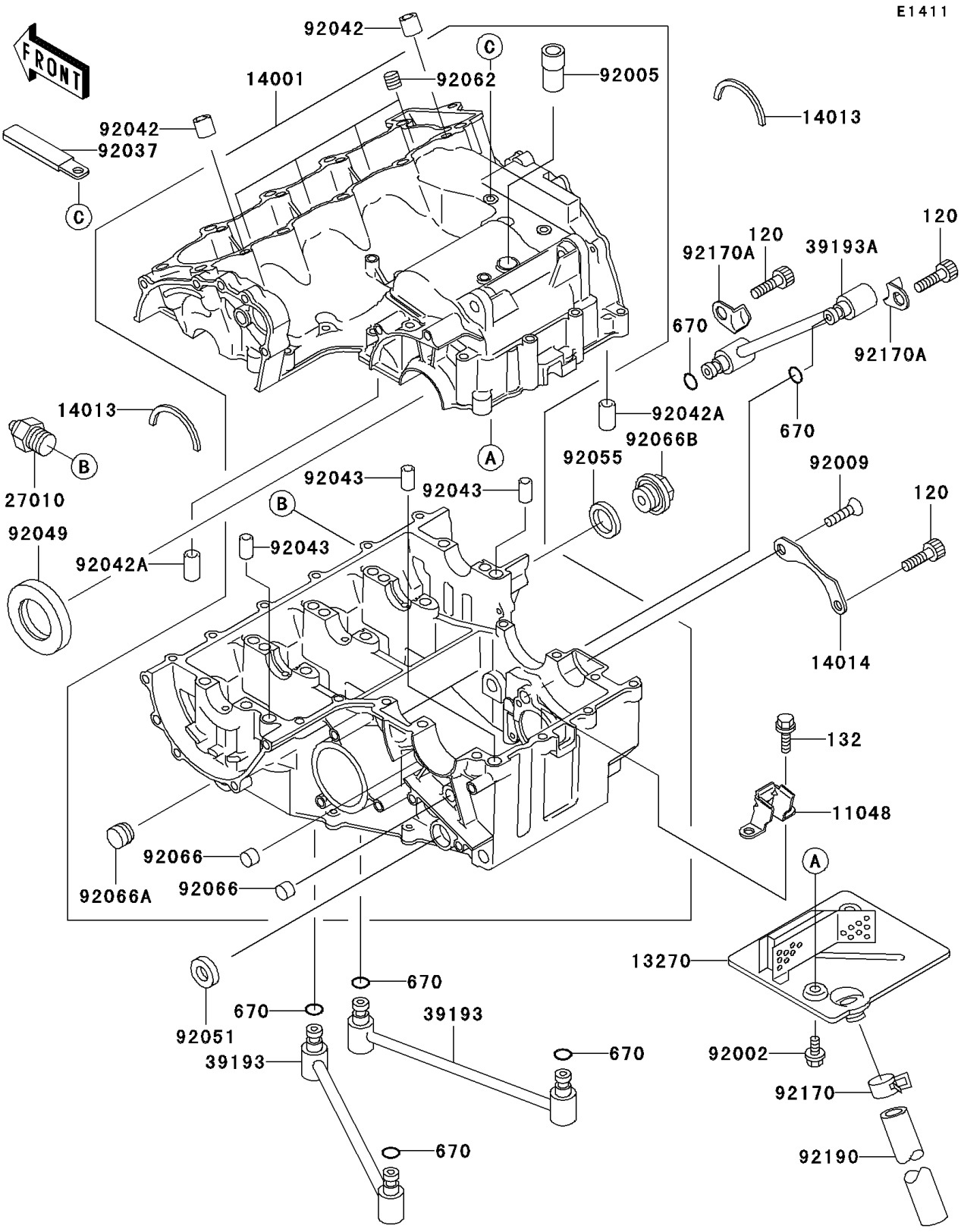

© 2026 Kawasaki Motors Corp., U.S.A.

2000 Ninja® ZX™-6R

PARTS LIST

Crankcase

ITEM NAME	PART NUMBER	QUANTITY
BOLT-SOCKET,6X16 (Ref # 120)	120P0616	3
BOLT-FLANGED-SMALL (Ref # 132)	132H0612	2
O RING (Ref # 670)	670D1505	6
BRACKET (Ref # 11048)	11048-1851	1
PLATE,BREATHER (Ref # 13270)	13270-1349	1
SET-CRANKCASE (Ref # 14001)	14001-1269	1
RING-POSITION (Ref # 14013)	14013-004	2
PLATE-POSITION (Ref # 14014)	14014-1123	1
SWITCH,OIL PRESSURE (Ref # 27010)	27010-1313	1
PIPE-OIL,MAIN-INPUT (Ref # 39193)	39193-1019	2
PIPE-OIL (Ref # 39193A)	39193-1020	1
BOLT,6X10 (Ref # 92002)	92002-1449	2
FITTING,BREATHER (Ref # 92005)	92005-1238	1
SCREW,6X16 (Ref # 92009)	92009-1360	1
CLAMP,WIRING HARNESS,L=60 (Ref # 92037)	92037-1069	1
PIN,DOWEL,6.3X8X14 (Ref # 92042)	92042-007	2
PIN,DOWEL,6X16 (Ref # 92042A)	92042-016	2
PIN (Ref # 92043)	92043-1506	3
SEAL-OIL,TC32528 (Ref # 92049)	92049-1307	1
SEAL-OIL,TB13225.5 (Ref # 92051)	92051-005	1
RING-O (Ref # 92055)	92055-1146	1
NOZZLE,5X6,SILVER (Ref # 92062)	92062-1086	4
PLUG (Ref # 92066)	92066-1110	2
PLUG,PT3/8X12 (Ref # 92066A)	92066-1252	1
PLUG,MAIN GALLERY,18X9 (Ref # 92066B)	92066-1394	1
CLAMP (Ref # 92170)	92170-1167	1
CLAMP (Ref # 92170A)	92170-1578	2
TUBE,9X12X180 (Ref # 92190)	92190-1580	1

© 2026 Kawasaki Motors Corp., U.S.A.