2007 Brute Force 650 4x4i

PARTS DIAGRAM

Ignition System

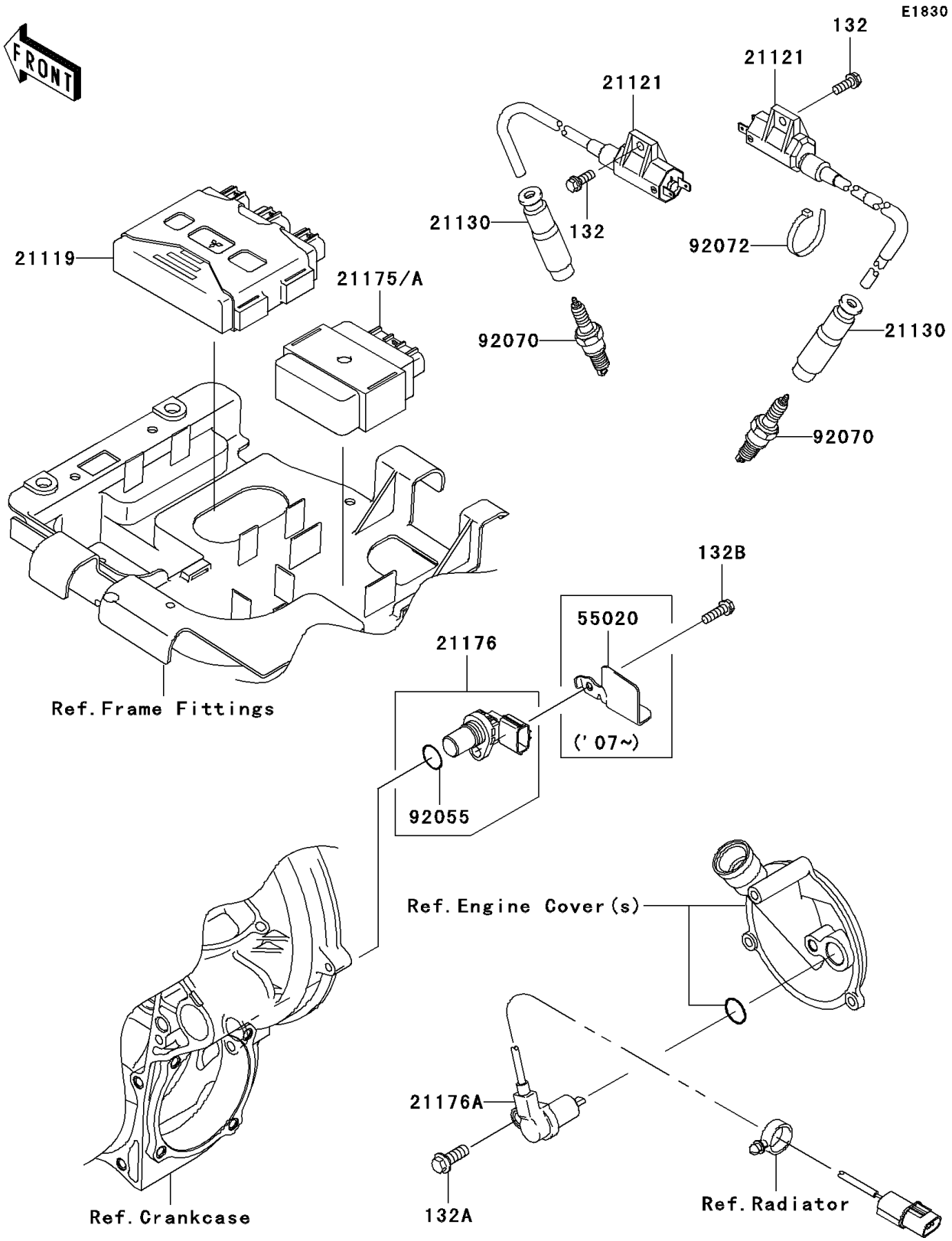

© 2026 Kawasaki Motors Corp., U.S.A.

2007 Brute Force 650 4x4i

PARTS LIST

Ignition System

ITEM NAME	PART NUMBER	QUANTITY
BOLT-FLANGED-SMALL,6X16 (Ref # 132)	132BA0616	2
BOLT-FLANGED-SMALL,8X22 (Ref # 132A)	132BA0822	1
BOLT-FLANGED-SMALL,6X20 (Ref # 132B)	132BD0620	1
IGNITER (Ref # 21119)	21119-0057	1
COIL-IGNITION (Ref # 21121)	21121-0018	2
CAP-SPARK PLUG (Ref # 21130)	21130-1071	2
CONTROL UNIT-ELECTRONIC (Ref # 21175)	21175-0086	1
SENSOR,SPEED (Ref # 21176)	21176-1104	1
SENSOR,REVERSE (Ref # 21176A)	21176-1109	1
GUARD (Ref # 55020)	55020-0247	1
RING-O (Ref # 92055)	92055-1718	1
PLUG-SPARK,CR7E(NGK) (Ref # 92070)	92070-1209	2
BAND,L=188 (Ref # 92072)	92072-1239	1

© 2026 Kawasaki Motors Corp., U.S.A.