2010 Brute Force 650 4x4i (Canada Only)

Kawasaki
Let the Good Times Roll®

PARTS DIAGRAM

Fuel Pump

E1520

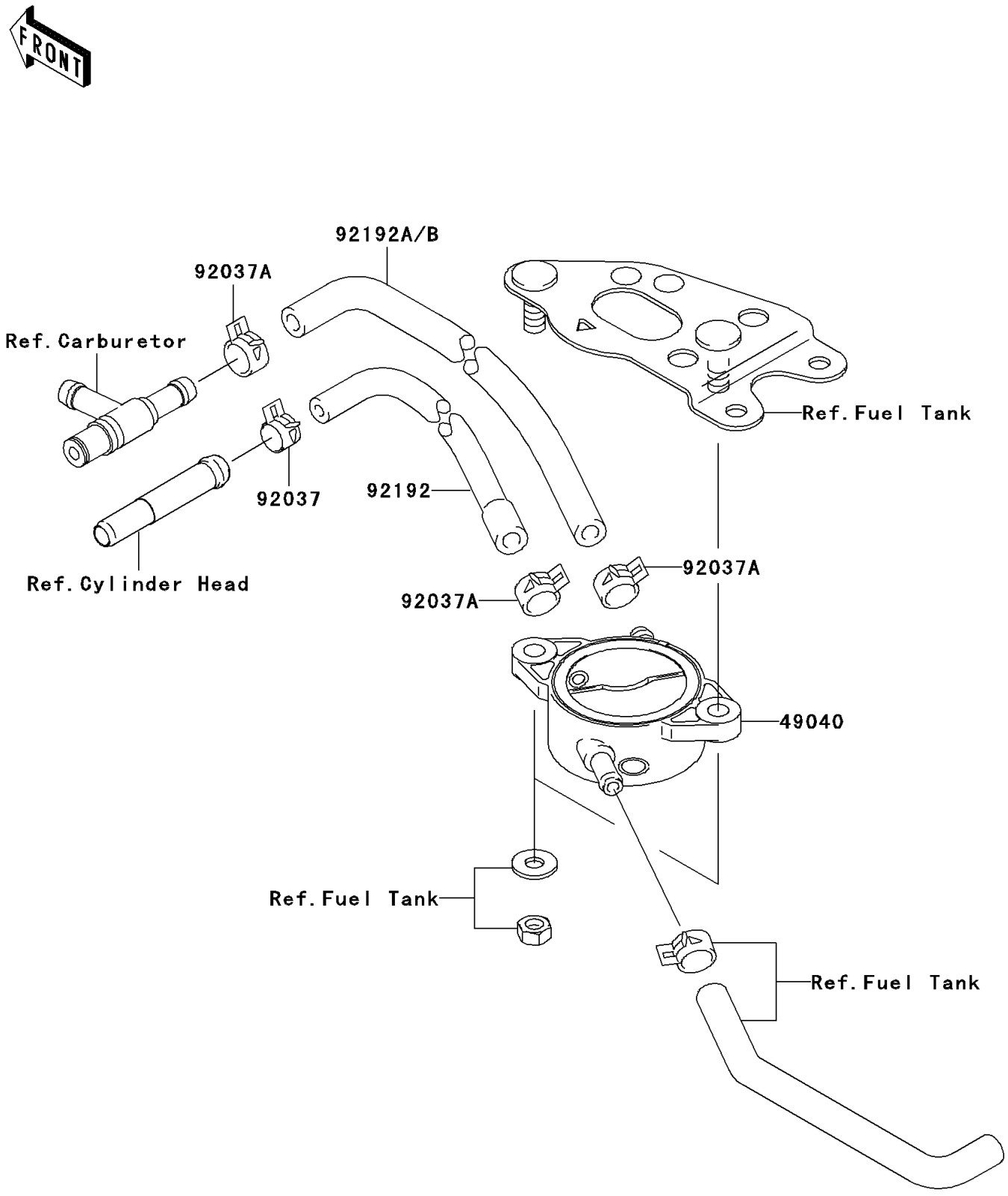

© 2026 Kawasaki Motors Corp., U.S.A.

2010 Brute Force 650 4x4i (Canada Only)

Kawasaki
Let the Good Times Roll®

PARTS LIST

Fuel Pump

ITEM NAME	PART NUMBER	QUANTITY
PUMP-FUEL (Ref # 49040)	49040-0005	1
CLAMP,TUBE (Ref # 92037)	92037-1461	1
CLAMP,TUBE (Ref # 92037A)	92037-1505	3
TUBE,L=510,BLUE STRIPE (Ref # 92192)	92192-0060	1
TUBE,5.8X10.8X580/30 (Ref # 92192B)	92192-0502	1

© 2026 Kawasaki Motors Corp., U.S.A.