1995 Ninja® ZX™-6R

PARTS DIAGRAM

Seat

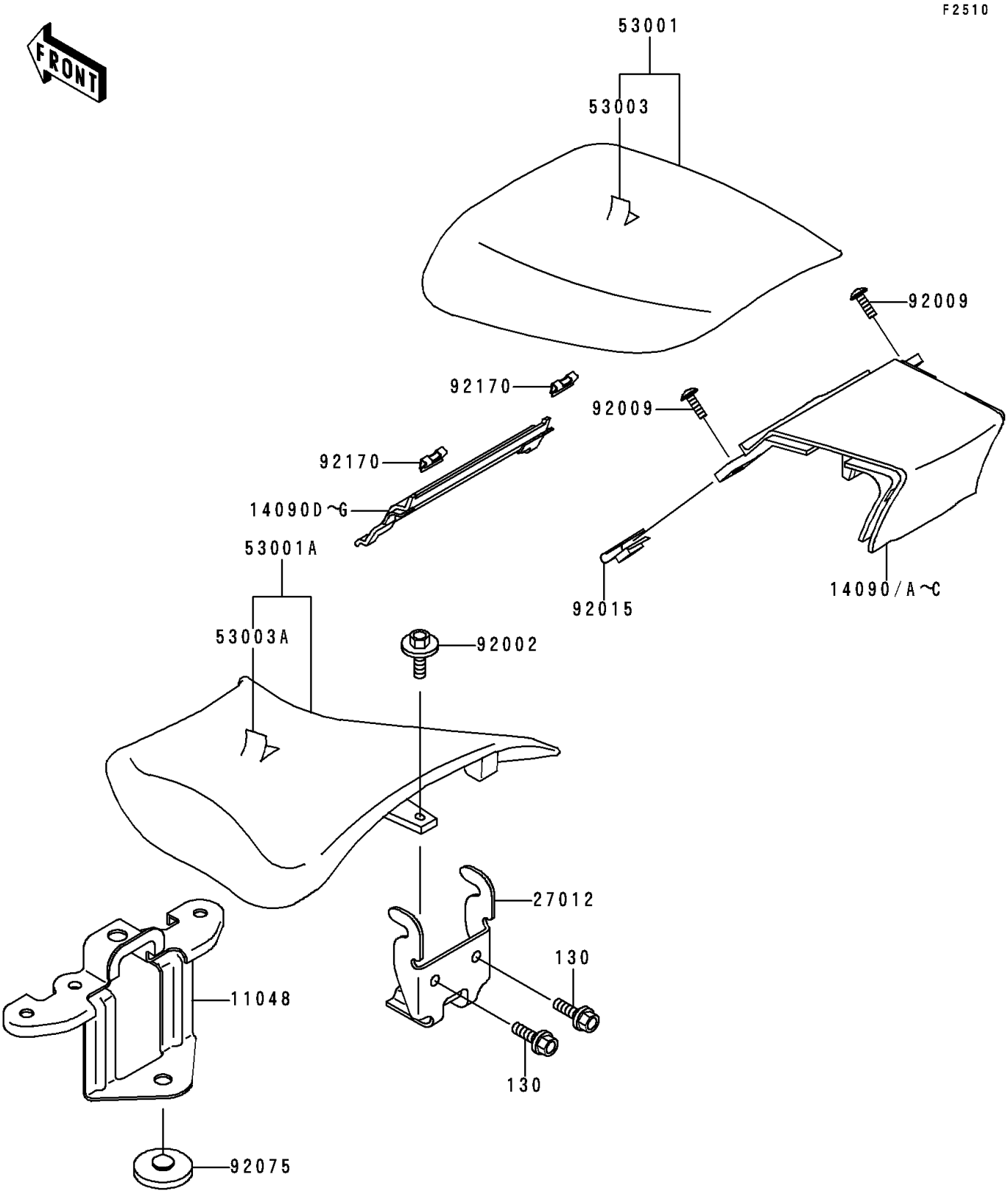

© 2026 Kawasaki Motors Corp., U.S.A.

1995 Ninja® ZX™-6R

PARTS LIST

Seat

ITEM NAME	PART NUMBER	QUANTITY
BOLT-FLANGED (Ref # 130)	130J0610	2
BRACKET,FRONT SEAT (Ref # 11048)	11048-1865	1
COVER,TAIL,CNT,F.RED (Ref # 14090A)	14090-1523-B1	1
COVER,TAIL,CNT,P.A.WHITE (Ref # 14090B)	14090-1523-R1	1
COVER,TAIL,FR,CNT,F.RED (Ref # 14090E)	14090-1610-B1	1
COVER,TAIL,FR,CNT,P.A.WHITE (Ref # 14090F)	14090-1610-R1	1
HOOK,REAR SEAT (Ref # 27012)	27012-1486	1
SEAT-ASSY,RR,BLACK (Ref # 53001)	53001-1643-MA	1
SEAT-ASSY,FR,BLACK (Ref # 53001A)	53001-1770-MA	1
LEATHER,REAR SEAT,BLACK (Ref # 53003)	53003-1252-MA	1
LEATHER,FRONT SEAT,BLACK (Ref # 53003A)	53003-1323-MA	1
BOLT,6X14 (Ref # 92002)	92002-1351	1
SCREW,5X16 (Ref # 92009)	92009-1654	2
NUT,5MM (Ref # 92015)	92015-1798	2
DAMPER,RUBBER (Ref # 92075)	92075-078	1
CLAMP (Ref # 92170)	92170-1440	2

© 2026 Kawasaki Motors Corp., U.S.A.