1996 Ninja® ZX™-6R

PARTS DIAGRAM

Engine Cover(s)

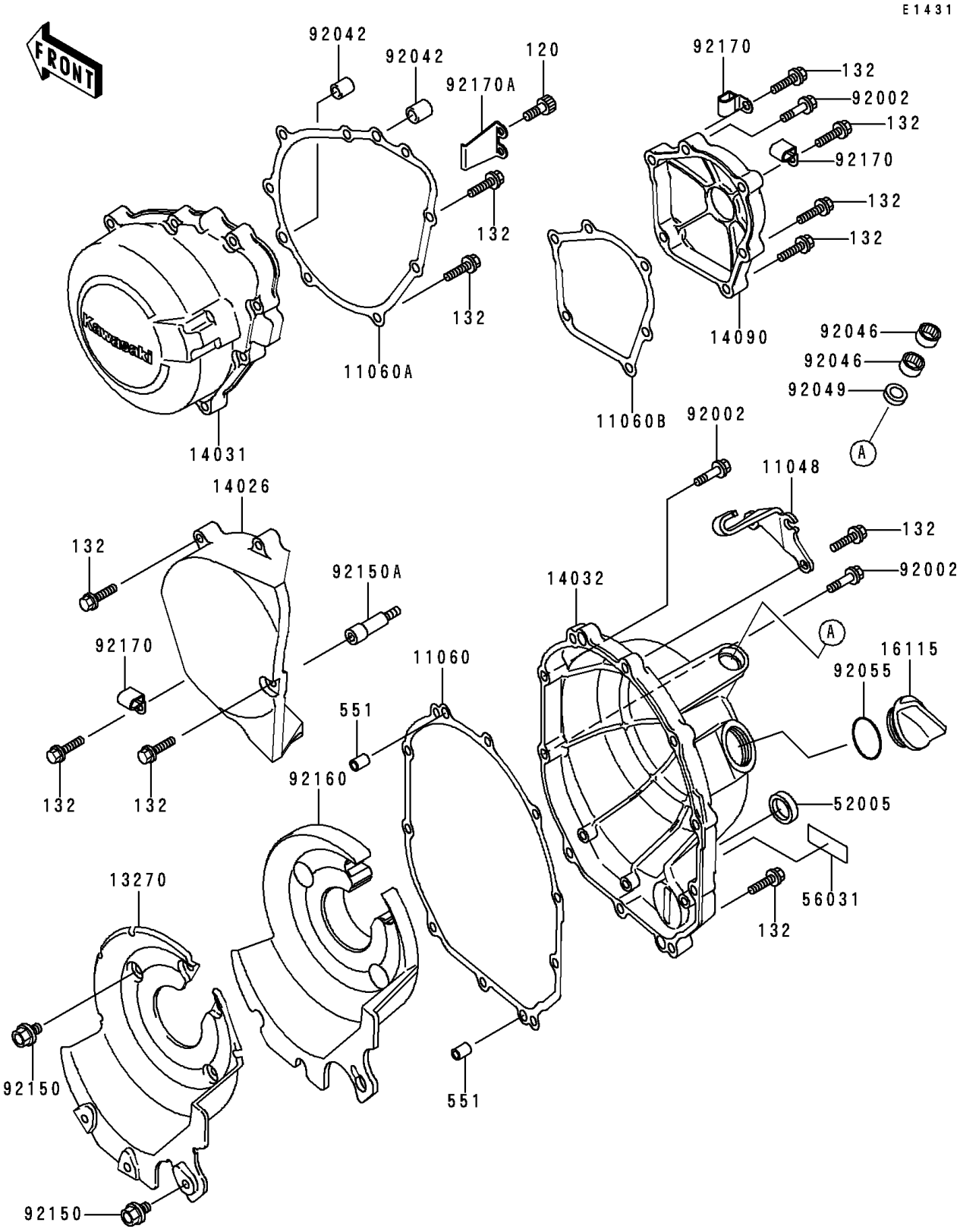

© 2026 Kawasaki Motors Corp., U.S.A.

1996 Ninja® ZX™-6R

PARTS LIST

Engine Cover(s)

ITEM NAME	PART NUMBER	QUANTITY
BOLT-SOCKET (Ref # 120)	120P0512	2
BOLT-FLANGED-SMALL (Ref # 132)	132J0630	26
PIN-DOWEL,8X14 (Ref # 551)	551A0814	2
BRACKET,CLUTCH COVER (Ref # 11048)	11048-1852	1
GASKET (Ref # 11060)	11060-1672	1
GASKET,GENERATOR COVER (Ref # 11060A)	11060-1673	1
GASKET,PULSING COVER (Ref # 11060B)	11060-1674	1
PLATE,CLUTCH COVER (Ref # 13270)	13270-1350	1
COVER-CHAIN (Ref # 14026)	14026-1234	1
COVER-GENERATOR (Ref # 14031)	14031-1307	1
COVER-CLUTCH (Ref # 14032)	14032-1400	1
COVER,PULSING (Ref # 14090)	14090-1521	1
CAP-OIL FILLER (Ref # 16115)	16115-1009	1
GAUGE,OIL LEVEL (Ref # 52005)	52005-1057	1
LABEL-MANUAL,OIL CAPACITY (Ref # 56031)	56031-1895	1
BOLT,6X30 (Ref # 92002)	92002-1534	3
PIN,DOWEL,6.3X8X14 (Ref # 92042)	92042-007	2
BEARING-NEEDLE,HK1210 (Ref # 92046)	92046-1010	2
SEAL-OIL,TB12205.5 (Ref # 92049)	92049-1271	1
RING-O,31.5X2.6 (Ref # 92055)	92055-049	1
BOLT,5X8 (Ref # 92150)	92150-1406	7
BOLT (Ref # 92150A)	92150-1889	1
DAMPER,CLUTCH COVER (Ref # 92160)	92160-1554	1
CLAMP (Ref # 92170)	92170-1577	3
CLAMP (Ref # 92170A)	92170-1579	1

© 2026 Kawasaki Motors Corp., U.S.A.