1998 Ninja® ZX™-6

PARTS DIAGRAM

Taillight(s)

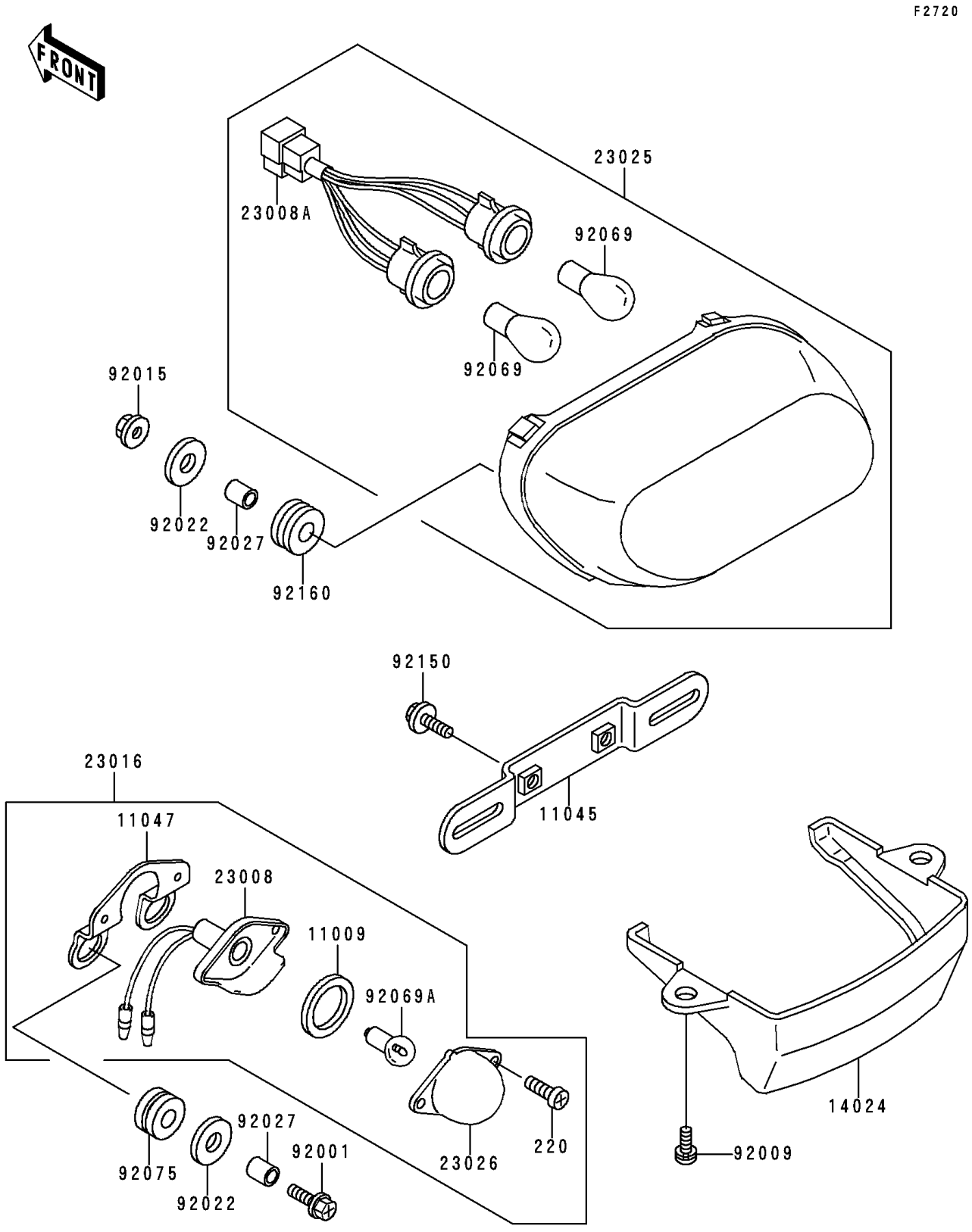

© 2026 Kawasaki Motors Corp., U.S.A.

1998 Ninja® ZX™-6

PARTS LIST

Taillight(s)

ITEM NAME	PART NUMBER	QUANTITY
SCREW-PAN-CROS (Ref # 220)	220B0410	2
GASKET,LICENSE PLATE LAMP (Ref # 11009)	11009-1372	1
BRACKET,LICENSE (Ref # 11045)	11045-1387	1
BRACKET,LICENSE PLATE LAMP (Ref # 11047)	11047-1889	1
COVER,LICENSE LAMP (Ref # 14024)	14024-1386	1
SOCKET-ASSY,LICENSE PLATE LAMP (Ref # 23008)	23008-1221	1
SOCKET-ASSY,TAIL LAMP (Ref # 23008A)	23008-1364	1
LAMP-ASSY,LICENSE PLATE (Ref # 23016)	23016-1126	1
LAMP-TAIL (Ref # 23025)	23025-1233	1
LENS,LAMP (Ref # 23026)	23026-1054	1
BOLT,6X25 (Ref # 92001)	92001-1524	2
SCREW,5X12,BLACK (Ref # 92009)	92009-1182	2
NUT,FLANGED,6MM (Ref # 92015)	92015-1367	3
WASHER,6.5X20X1.6 (Ref # 92022)	92022-1557	5
COLLAR,6.8X10X12 (Ref # 92027)	92027-162	5
BULB,12V 27/8W (Ref # 92069)	92069-059	2
BULB,12V 8W (Ref # 92069A)	92069-1012	1
DAMPER (Ref # 92075)	92075-209	2
BOLT,6X16 (Ref # 92150)	92150-1909	2
DAMPER (Ref # 92160)	92160-1162	3

© 2026 Kawasaki Motors Corp., U.S.A.