1998 Ninja® ZX™-6

PARTS DIAGRAM

Side Covers/Chain Cover(ZX600-E6)

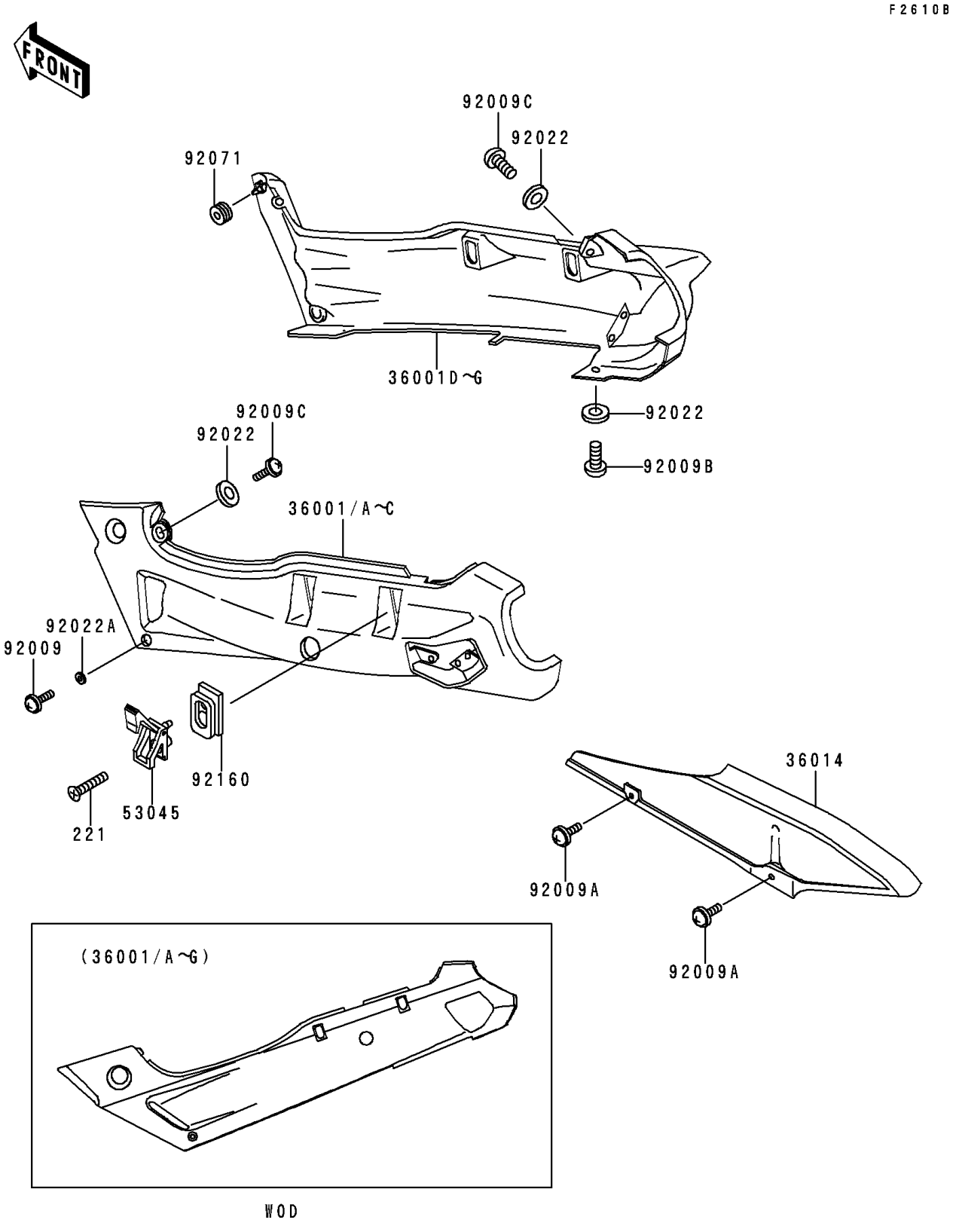

© 2026 Kawasaki Motors Corp., U.S.A.

1998 Ninja® ZX™-6

PARTS LIST

Side Covers/Chain Cover(ZX600-E6)

ITEM NAME	PART NUMBER	QUANTITY
CASE-CHAIN (Ref # 36014)	36014-1187	1
SCREW-CSK-CROS,6X20 (Ref # 221)	221E0620	4
HOOK-ASSY,TOOL BOX (Ref # 53045)	53045-1053	4
SCREW,6X20 (Ref # 92009)	92009-1298	2
SCREW,6X10 (Ref # 92009A)	92009-1402	2
SCREW,5X14 (Ref # 92009B)	92009-1653	2
SCREW,5X20 (Ref # 92009C)	92009-1656	4
WASHER,NYLON,5.3X11.5X1.5 (Ref # 92022)	92022-1521	6
WASHER,6.5X16X1.0 (Ref # 92022A)	92022-1654	2
GROMMET (Ref # 92071)	92071-056	2
DAMPER,ROPE HOOK (Ref # 92160)	92160-1042	4
COVER-SIDE,LH,L.W.GREEN (Ref # 36001)	36001-1493-DS	1
COVER-SIDE,LH,A.RED MICA (Ref # 36001A)	36001-1493-1Q	1
COVER-SIDE,LH,RED MICA (Ref # 36001B)	36001-1493-2D	1
COVER-SIDE,LH,L.W.GREEN (Ref # 36001C)	36001-1493-24	1
COVER-SIDE,RH,L.W.GREEN (Ref # 36001D)	36001-1494-DS	1
COVER-SIDE,RH,A.RED MICA (Ref # 36001E)	36001-1494-1Q	1
COVER-SIDE,RH,RED MICA (Ref # 36001F)	36001-1494-2D	1
COVER-SIDE,RH,L.W.GREEN (Ref # 36001G)	36001-1494-24	1

© 2026 Kawasaki Motors Corp., U.S.A.