2025 Mule PRO-FX 820 EPS

PARTS DIAGRAM

Decals(White)

F2861

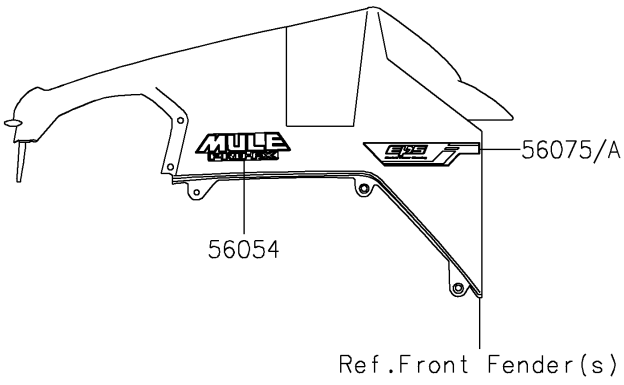

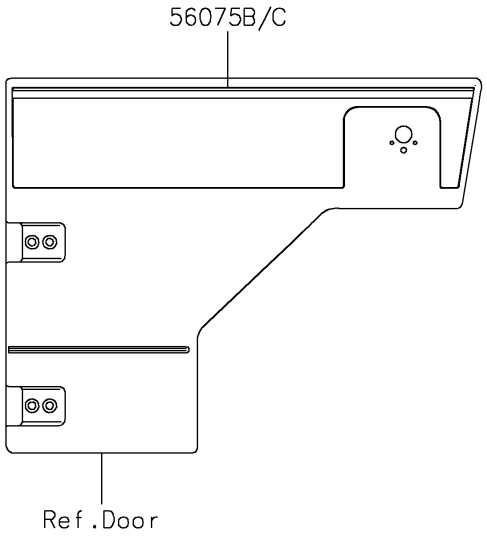

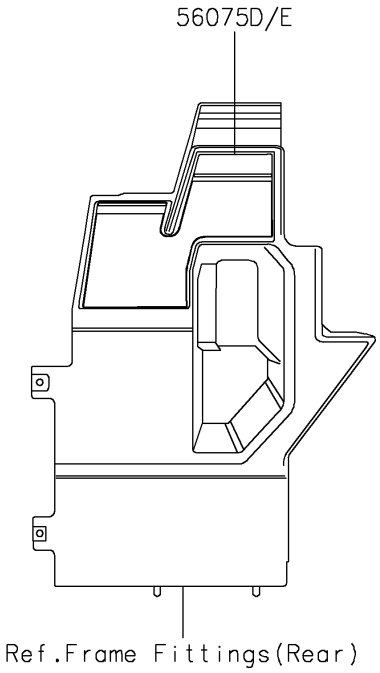

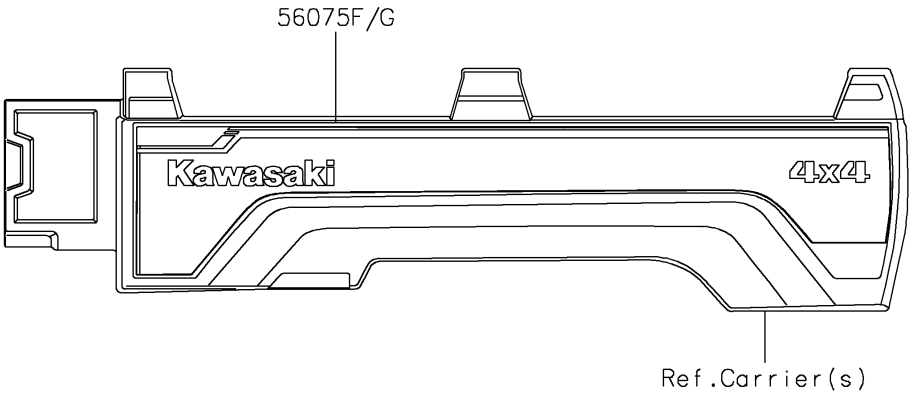

© 2026 Kawasaki Motors Corp., U.S.A.

2025 Mule PRO-FX 820 EPS

PARTS LIST

Decals(White)

ITEM NAME	PART NUMBER	QUANTITY
MARK,MULE PRO-FX (Ref # 56054)	56054-2431	2
PATTERN,FR FENDER,LH (Ref # 56075)	56075-4319	1
PATTERN,FR FENDER,RH (Ref # 56075A)	56075-4320	1
PATTERN,SIDE GUARD,LH,FR (Ref # 56075B)	56075-4321	1
PATTERN,SIDE GUARD,RH,FR (Ref # 56075C)	56075-4322	1
PATTERN,CARRIER,LH,FR (Ref # 56075D)	56075-4327	1
PATTERN,CARRIER,RH,FR (Ref # 56075E)	56075-4328	1
PATTERN,CARRIER PANEL,LH (Ref # 56075F)	56075-4333	1
PATTERN,CARRIER PANEL,RH (Ref # 56075G)	56075-4334	1

© 2026 Kawasaki Motors Corp., U.S.A.