2025 Mule PRO-FX 820 EPS

PARTS DIAGRAM

Front Brake

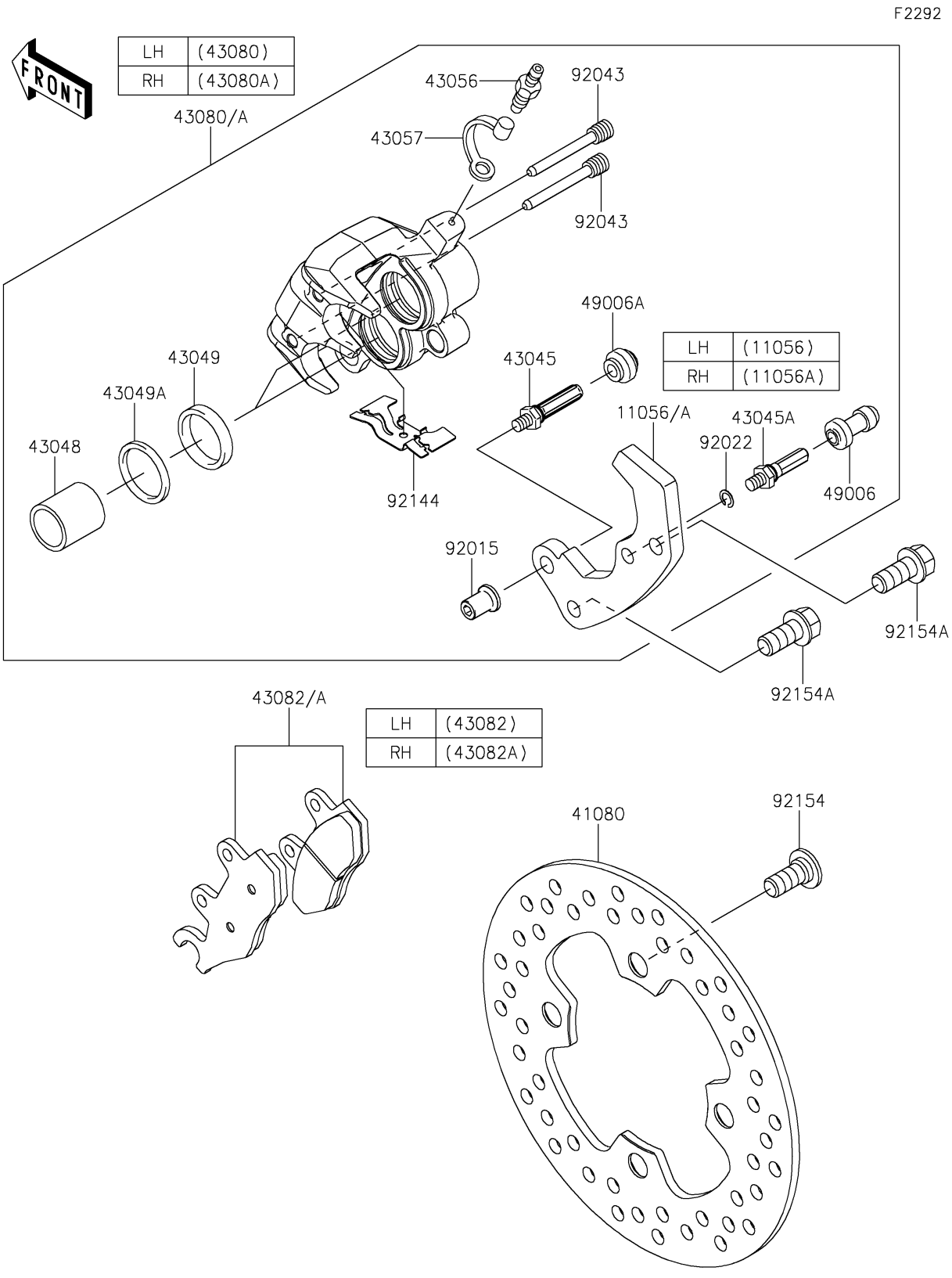

© 2026 Kawasaki Motors Corp., U.S.A.

2025 Mule PRO-FX 820 EPS

PARTS LIST

Front Brake

ITEM NAME	PART NUMBER	QUANTITY
BRACKET,LH (Ref # 11056)	11056-3807	1
BRACKET,RH (Ref # 11056A)	11056-3829	1
DISC (Ref # 41080)	41080-0608	2
SHAFT-CALIPER (Ref # 43045)	43045-0011	2
SHAFT-CALIPER (Ref # 43045A)	43045-1010	2
PISTON-CALIPER (Ref # 43048)	43048-1068	4
PACKING,PISTON SEAL (Ref # 43049)	43049-1060	4
PACKING,PISTON SEAL (Ref # 43049A)	43049-1061	4
BREATHER (Ref # 43056)	43056-1055	2
CAP-BREATHER (Ref # 43057)	43057-1001	2
CALIPER-SUB-ASSY,FR,LH (Ref # 43080)	43080-0138	1
CALIPER-SUB-ASSY,FR,RH (Ref # 43080A)	43080-0139	1
PAD-ASSY-BRAKE,FR,LH (Ref # 43082)	43082-0216	1
PAD-ASSY-BRAKE,FR,RH (Ref # 43082A)	43082-0217	1
BOOT,CALIPER (Ref # 49006)	49006-1088	2
BOOT,CALIPER (Ref # 49006A)	49006-1242	2
NUT (Ref # 92015)	92015-1740	2
WASHER,WAVE (Ref # 92022)	92022-1373	2
PIN,HANGER (Ref # 92043)	92043-1416	4
SPRING,PAD (Ref # 92144)	92144-1847	2
BOLT,SOCKET,10X23 (Ref # 92154)	92154-0713	8
BOLT,FLANGED,10X22 (Ref # 92154A)	92154-1327	4

© 2026 Kawasaki Motors Corp., U.S.A.