2025 Mule PRO-FX 820 EPS

PARTS DIAGRAM

Wheels/Tires

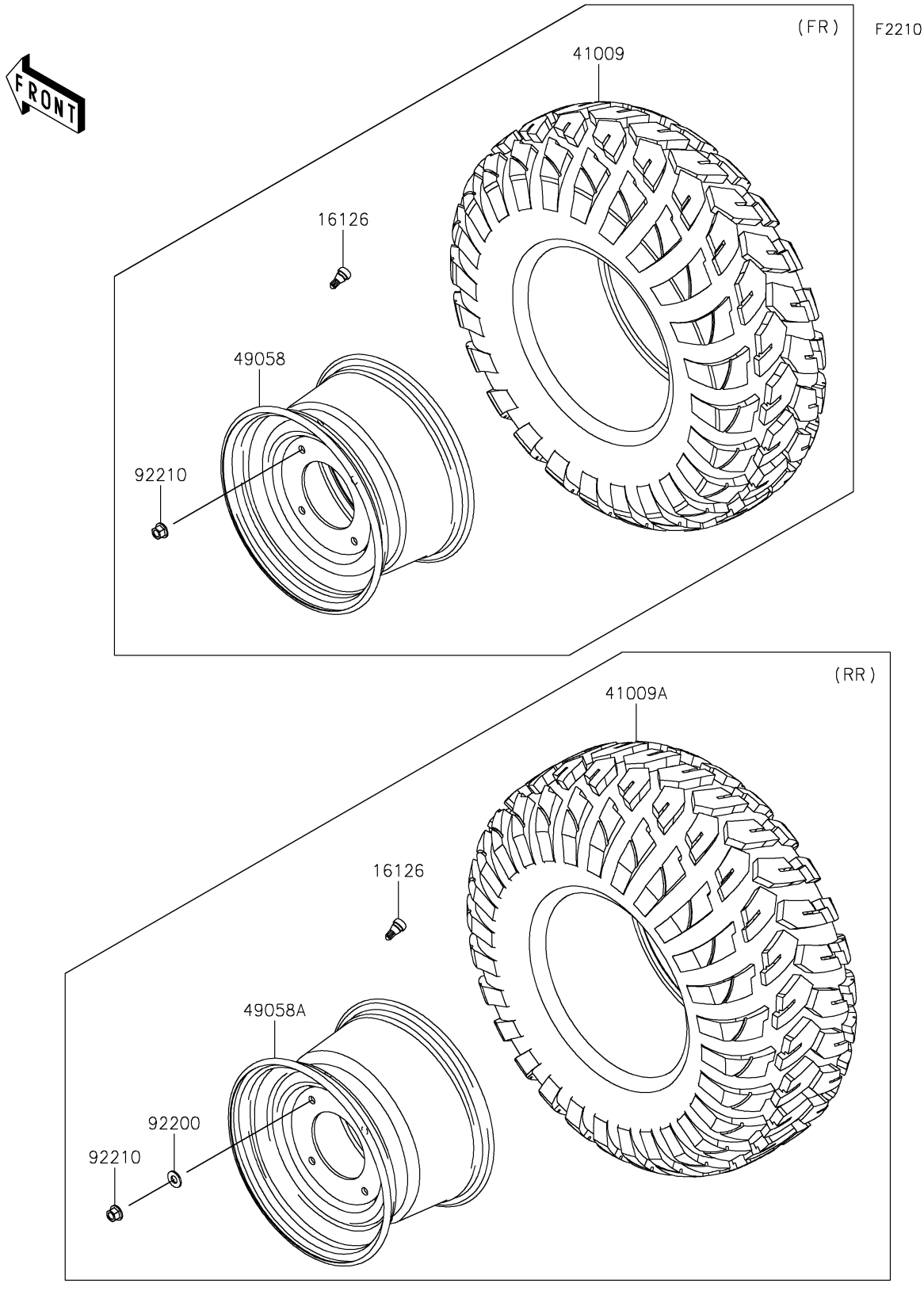

© 2026 Kawasaki Motors Corp., U.S.A.

2025 Mule PRO-FX 820 EPS

PARTS LIST

Wheels/Tires

ITEM NAME	PART NUMBER	QUANTITY
VALVE (Ref # 16126)	16126-4001	4
TIRE,26X9.00R12 4PR,FRONTIER (Ref # 41009)	41009-0567	2
TIRE,26X11.00R12 4PR,FRONTIER (Ref # 41009A)	41009-0568	2
WHEEL,FR,12X7.0AT,F.S.BLACK (Ref # 49058)	49058-0608-397	2
WHEEL,RR,12X8.0AT,F.S.BLACK (Ref # 49058A)	49058-0611-397	2
WASHER,12.1X26X2.3 (Ref # 92200)	92200-0930	8
NUT,12MM (Ref # 92210)	92210-0603	16

© 2026 Kawasaki Motors Corp., U.S.A.