2025 Mule PRO-FX 820 EPS

PARTS DIAGRAM

Air Cleaner-Belt Converter

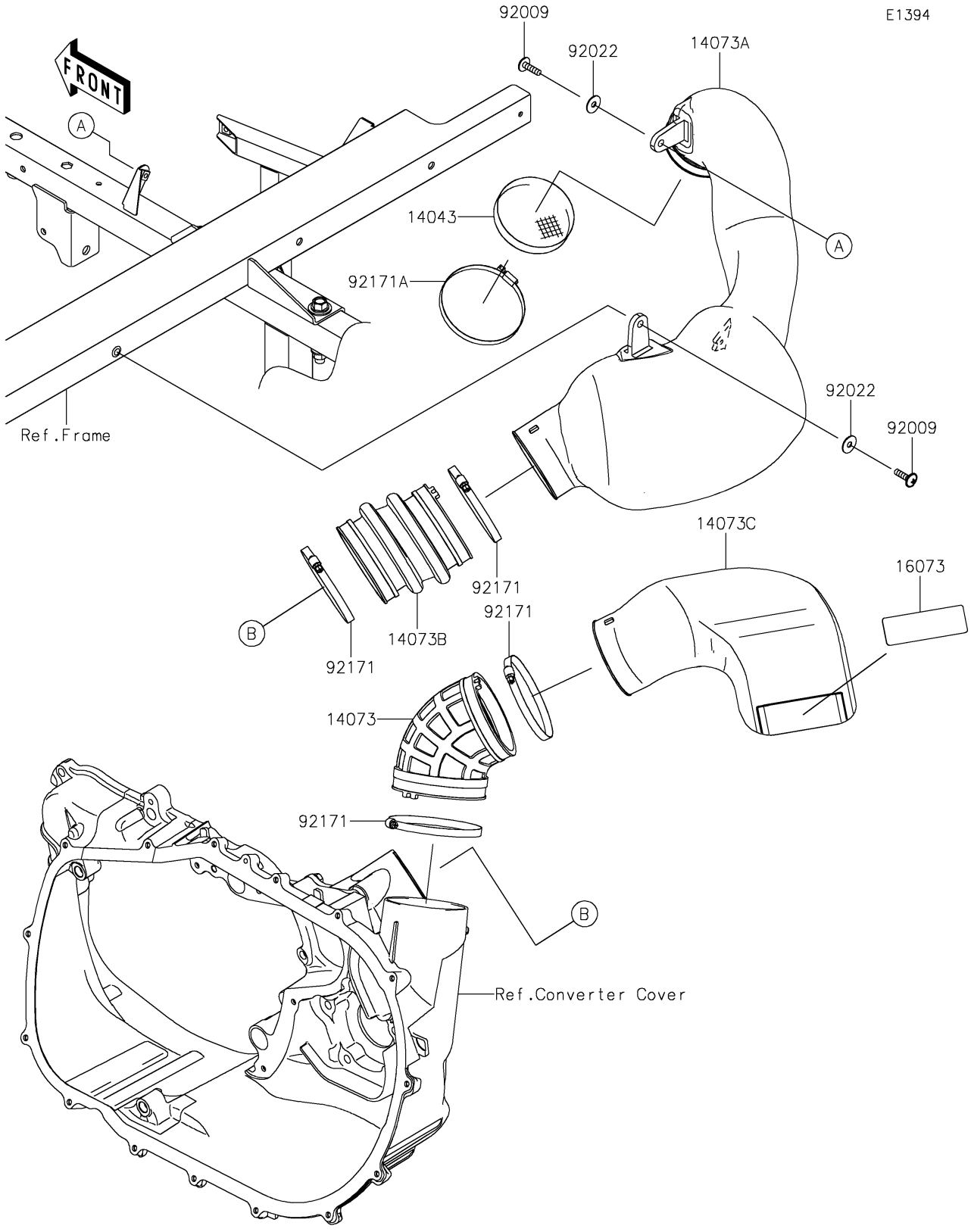

© 2026 Kawasaki Motors Corp., U.S.A.

2025 Mule PRO-FX 820 EPS

PARTS LIST

Air Cleaner-Belt Converter

ITEM NAME	PART NUMBER	QUANTITY
FILTER (Ref # 14043)	14043-0013	1
DUCT,EXHAUST (Ref # 14073)	14073-0788	1
DUCT,INTAKE (Ref # 14073A)	14073-0789	1
DUCT,INTAKE (Ref # 14073B)	14073-0790	1
DUCT,EXHAUST (Ref # 14073C)	14073-0793	1
INSULATOR (Ref # 16073)	16073-0826	1
SCREW,6X22 (Ref # 92009)	92009-1441	2
WASHER,PLAIN,6.5X20X1 (Ref # 92022)	92022-165	2
CLAMP (Ref # 92171)	92171-1383	4
CLAMP (Ref # 92171A)	92171-3716	1

© 2026 Kawasaki Motors Corp., U.S.A.