1998 Ninja® ZX™-6

PARTS DIAGRAM

Front Brake

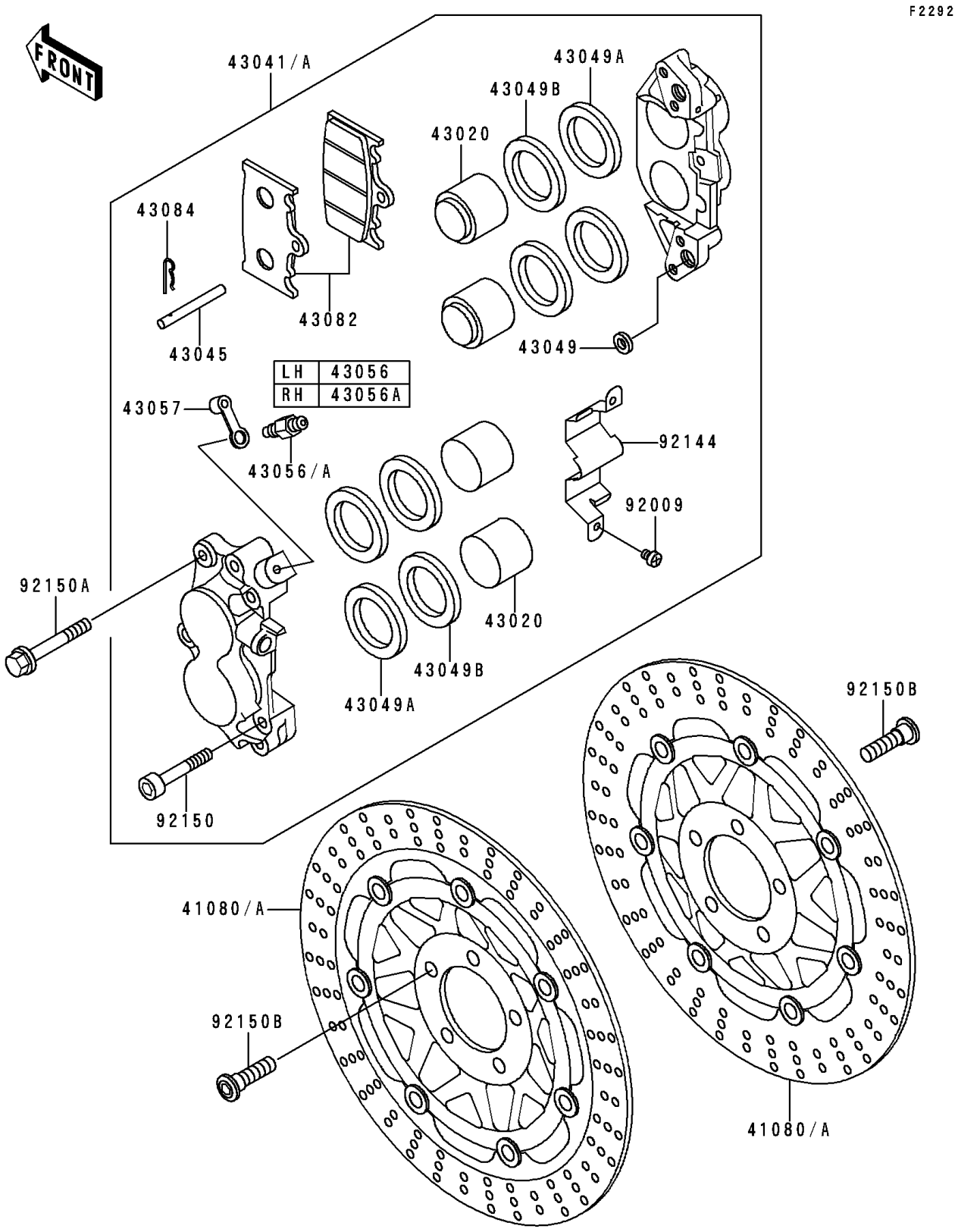

© 2026 Kawasaki Motors Corp., U.S.A.

1998 Ninja® ZX™-6

PARTS LIST

Front Brake

ITEM NAME	PART NUMBER	QUANTITY
DISC,FR,GRAY+SILVER (Ref # 41080A)	41080-1436-5C	2
PISTON-COMP-BRAKE (Ref # 43020)	43020-1089	8
CALIPER-ASSY,FR,LH,M.F.GRAY (Ref # 43041)	43041-1497-FE	1
CALIPER-ASSY,FR,RH,M.F.GRAY (Ref # 43041A)	43041-1498-FE	1
SHAFT-CALIPER (Ref # 43045)	43045-007	2
PACKING,SEAL,6.5X11.5X2.2 (Ref # 43049)	43049-1004	4
PACKING (Ref # 43049A)	43049-1067	8
PACKING (Ref # 43049B)	43049-1068	8
BREATHER (Ref # 43056)	43056-003	1
BREATHER-BRAKE (Ref # 43056A)	43056-1054	1
CAP-BREATHER (Ref # 43057)	43057-003	2
PAD-ASSY-BRAKE (Ref # 43082)	43082-1142	2
CLAMP,PAD (Ref # 43084)	43084-003	2
SCREW,4X6 (Ref # 92009)	92009-1569	4
SPRING (Ref # 92144)	92144-1399	2
BOLT,SOCKET,8X40 (Ref # 92150)	92150-1272	8
BOLT,FLANGED,10X38 (Ref # 92150A)	92150-1297	4
BOLT,SOCKET,8X30 (Ref # 92150B)	92150-1771	10

© 2026 Kawasaki Motors Corp., U.S.A.