1998 Ninja® ZX™-6

PARTS DIAGRAM

Swingarm

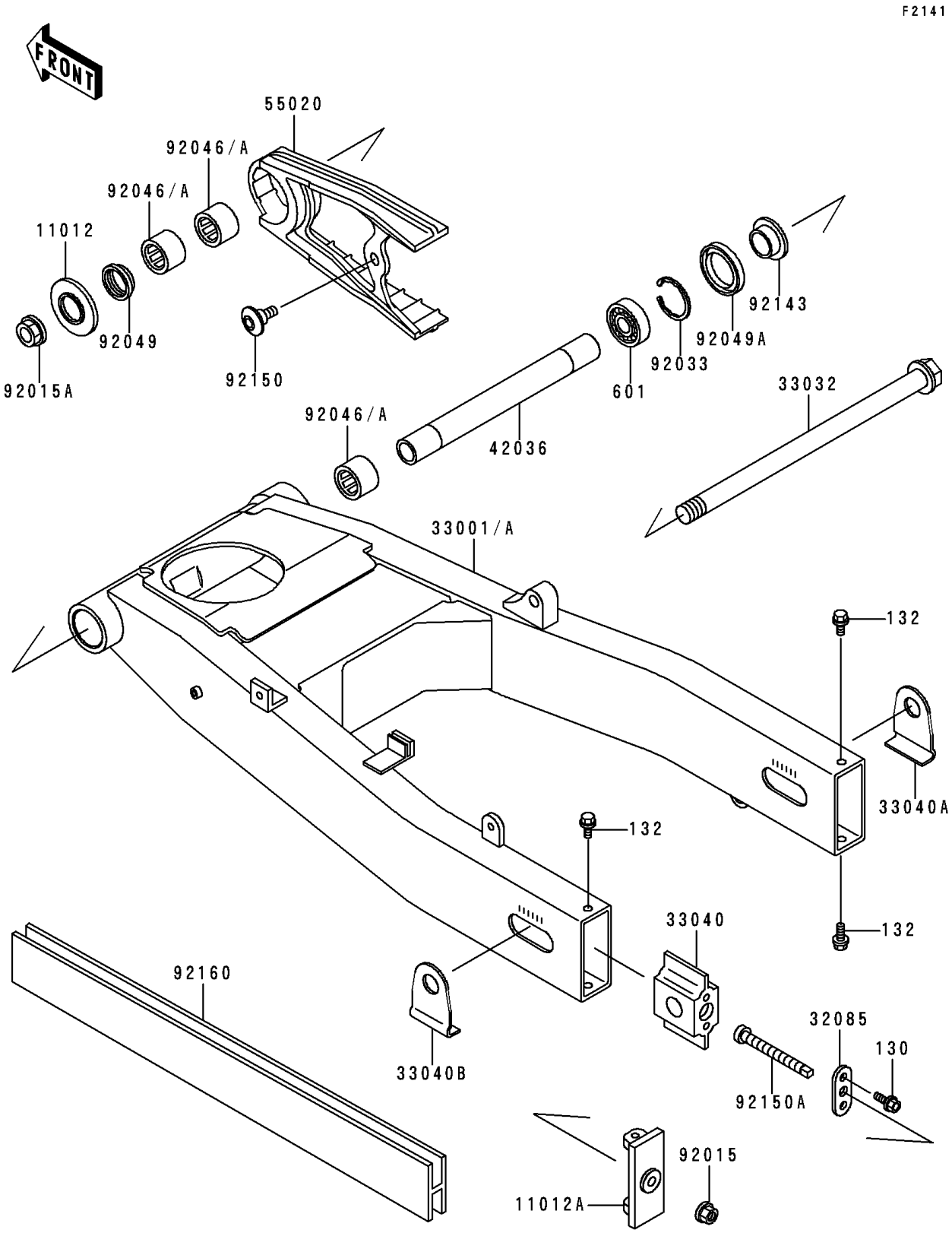

© 2026 Kawasaki Motors Corp., U.S.A.

1998 Ninja® ZX™-6

PARTS LIST

Swingarm

ITEM NAME	PART NUMBER	QUANTITY
BOLT-FLANGED,6X14 (Ref # 130)	130H0614	4
BOLT-FLANGED-SMALL (Ref # 132)	132E0612	4
BEARING-BALL,#6004 (Ref # 601)	601A6004	1
CAP (Ref # 11012)	11012-1658	1
CAP,CHAIN ADJUSTER (Ref # 11012A)	11012-1704	2
STOPPER,CHAIN ADJUSTER (Ref # 32085)	32085-1351	2
SHAFT-SWING ARM (Ref # 33032)	33032-1165	1
ADJUSTER-CHAIN,INSIDE (Ref # 33040)	33040-1133	2
ADJUSTER-CHAIN,OUTSIDE,RH (Ref # 33040A)	33040-1135	1
ADJUSTER-CHAIN,OUTSIDE,LH (Ref # 33040B)	33040-1141	1
SLEEVE,SWING ARM,L=213 (Ref # 42036)	42036-1283	1
GUARD,CHAIN (Ref # 55020)	55020-1524	1
NUT,8MM (Ref # 92015)	92015-1143	2
NUT,FLANGED,20MM (Ref # 92015A)	92015-1724	1
RING-SNAP,42MM (Ref # 92033)	92033-1041	1
BEARING-NEEDLE,7E-HVS28X34X17 (Ref # 92046A)	92046-1235	3
SEAL-OIL (Ref # 92049)	92049-1181	1
SEAL-OIL,MHSA25 42 6 (Ref # 92049A)	92049-1314	1
COLLAR,SWING ARM,L=12.5 (Ref # 92143)	92143-1227	1
BOLT,SOCKET,6MM (Ref # 92150)	92150-1154	1
BOLT,CHAIN ADJUSTER (Ref # 92150A)	92150-1285	2
DAMPER,SWING ARM (Ref # 92160)	92160-1174	2
ARM-COMP-SWING,SILVER NO.35 (Ref # 33001)	33001-1488-TX	1
ARM-COMP-SWING,SILVER NO.35 (Ref # 33001A)	33001-1488-VZ	1

© 2026 Kawasaki Motors Corp., U.S.A.