1998 Ninja® ZX™-6

PARTS DIAGRAM

Starter Motor

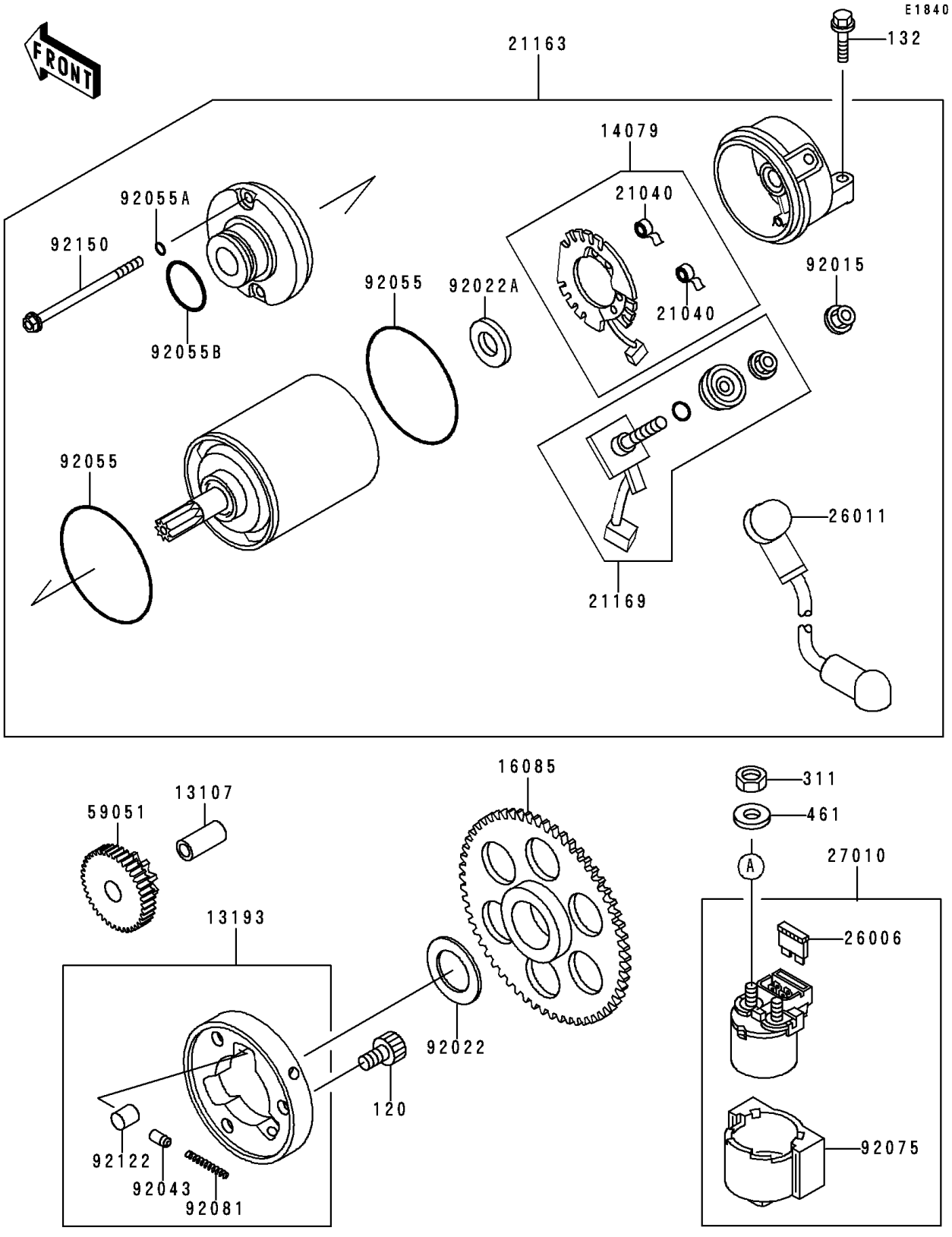

© 2026 Kawasaki Motors Corp., U.S.A.

1998 Ninja® ZX™-6

PARTS LIST

Starter Motor

ITEM NAME	PART NUMBER	QUANTITY
BOLT-SOCKET,8X14 (Ref # 120)	120P0814	3
BOLT-FLANGED-SMALL,6X25 (Ref # 132)	132H0625	2
NUT-HEX (Ref # 311)	311H0600	2
WASHER-SPRING (Ref # 461)	461L0600	2
SHAFT,7.8X12X26.5 (Ref # 13107)	13107-1176	1
CLUTCH-ASSY-ONEWAY (Ref # 13193)	13193-1002	1
HOLDER-ASSY,CARBON BRUSH (Ref # 14079)	14079-1082	1
GEAR,ONEWAY CLUTCH (Ref # 16085)	16085-1224	1
SPRING-BRUSH (Ref # 21040)	21040-1051	2
STARTER-ELECTRIC (Ref # 21163)	21163-1211	1
TERMINAL,STARTER (Ref # 21169)	21169-1058	1
FUSE,30A-G (Ref # 26006)	26006-1006	1
WIRE-LEAD,STARTER MOTOR (Ref # 26011)	26011-1576	1
SWITCH,MAGNETIC (Ref # 27010)	27010-1213	1
GEAR-SPUR,IDLE (Ref # 59051)	59051-1232	1
NUT (Ref # 92015)	92015-1623	1
WASHER,25.5X38X1 (Ref # 92022)	92022-145	1
WASHER (Ref # 92022A)	92022-2200	1
PIN (Ref # 92043)	92043-132	3
RING-O,62MM (Ref # 92055)	92055-1260	2
RING-O,4.5MM (Ref # 92055A)	92055-1261	2
RING-O,24.4MM (Ref # 92055B)	92055-1262	1
DAMPER,MAGNETIC SWITCH (Ref # 92075)	92075-1863	1
SPRING,COIL (Ref # 92081)	92081-159	3
ROLLER (Ref # 92122)	92122-006	3
BOLT (Ref # 92150)	92150-1237	2

© 2026 Kawasaki Motors Corp., U.S.A.