1998 Ninja® ZX™-6

PARTS DIAGRAM

Oil Pump/Oil Filter

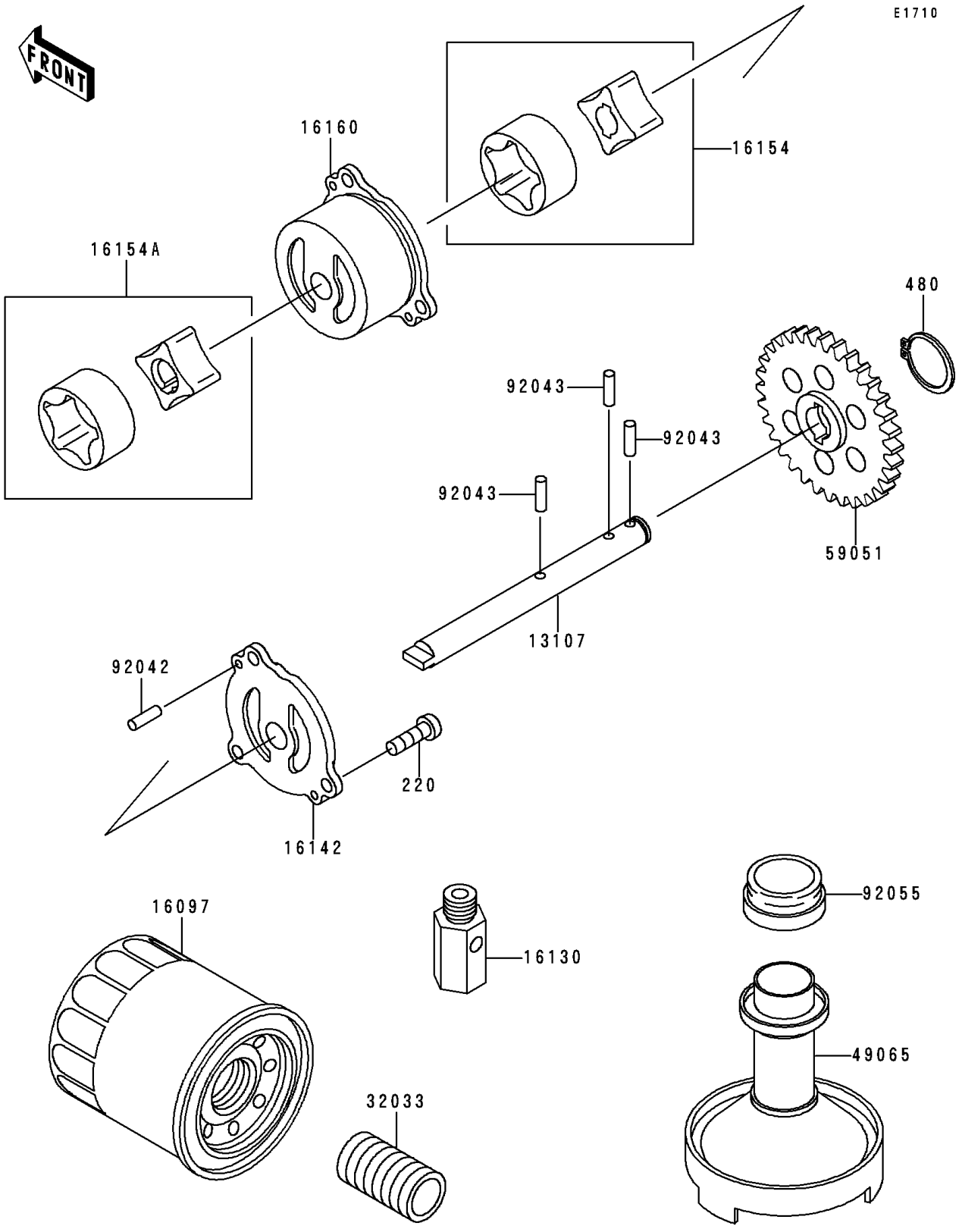

© 2026 Kawasaki Motors Corp., U.S.A.

1998 Ninja® ZX™-6

PARTS LIST

Oil Pump/Oil Filter

ITEM NAME	PART NUMBER	QUANTITY
SCREW-PAN-CROS,6X16 (Ref # 220)	220B0616	3
CIRCLIP-TYPE-C,13MM (Ref # 480)	480J1300	1
SHAFT,OIL PUMP (Ref # 13107)	13107-1265	1
FILTER-ASSY-OIL (Ref # 16097)	16097-1063	1
VALVE-ASSY-RELIEF (Ref # 16130)	16130-1058	2
COVER-PUMP (Ref # 16142)	16142-1100	1
ROTOR-PUMP,ENGINE (Ref # 16154)	16154-1085	1
ROTOR-PUMP,OIL COOLER (Ref # 16154A)	16154-1086	1
BODY,OIL PUMP (Ref # 16160)	16160-1159	1
PIPE,OIL FILTER (Ref # 32033)	32033-1535	1
FILTER-OIL (Ref # 49065)	49065-1056	1
GEAR-SPUR,OIL PUMP (Ref # 59051)	59051-1308	1
PIN,DOWEL,4X15.8 (Ref # 92042)	92042-014	1
PIN,17.9X5.0 (Ref # 92043)	92043-1444	3
RING-O,OIL FILTER (Ref # 92055)	92055-1354	1

© 2026 Kawasaki Motors Corp., U.S.A.