1998 Ninja® ZX™-6

PARTS DIAGRAM

Oil Pan

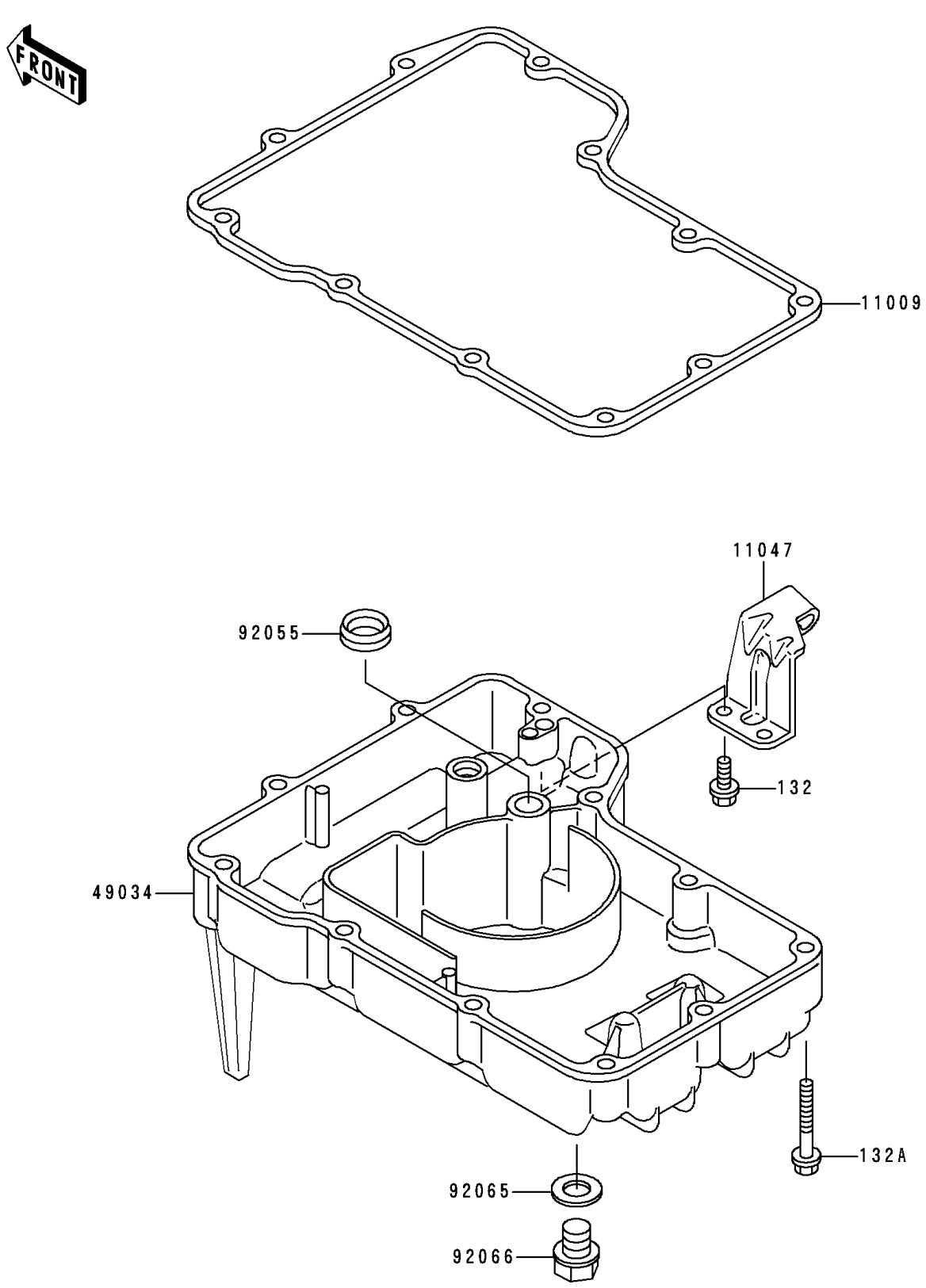

© 2026 Kawasaki Motors Corp., U.S.A.

1998 Ninja® ZX™-6

PARTS LIST

Oil Pan

ITEM NAME	PART NUMBER	QUANTITY
BOLT-FLANGED-SMALL (Ref # 132)	132E0612	2
BOLT-FLANGED-SMALL (Ref # 132A)	132E0640	11
GASKET,OIL PAN (Ref # 11009)	11009-1870	1
BRACKET,CLUTCH CABLE (Ref # 11047)	11047-1983	1
PAN-OIL (Ref # 49034)	49034-1090	1
RING-O,OD=18 (Ref # 92055)	92055-048	1
GASKET,12X22X2,DRAIN PLUG (Ref # 92065)	92065-097	1
PLUG,OIL DRAIN,12X15 (Ref # 92066)	92066-1174	1

© 2026 Kawasaki Motors Corp., U.S.A.