1998 Ninja® ZX™-6

PARTS DIAGRAM

Crankcase Bolt Pattern

E1412

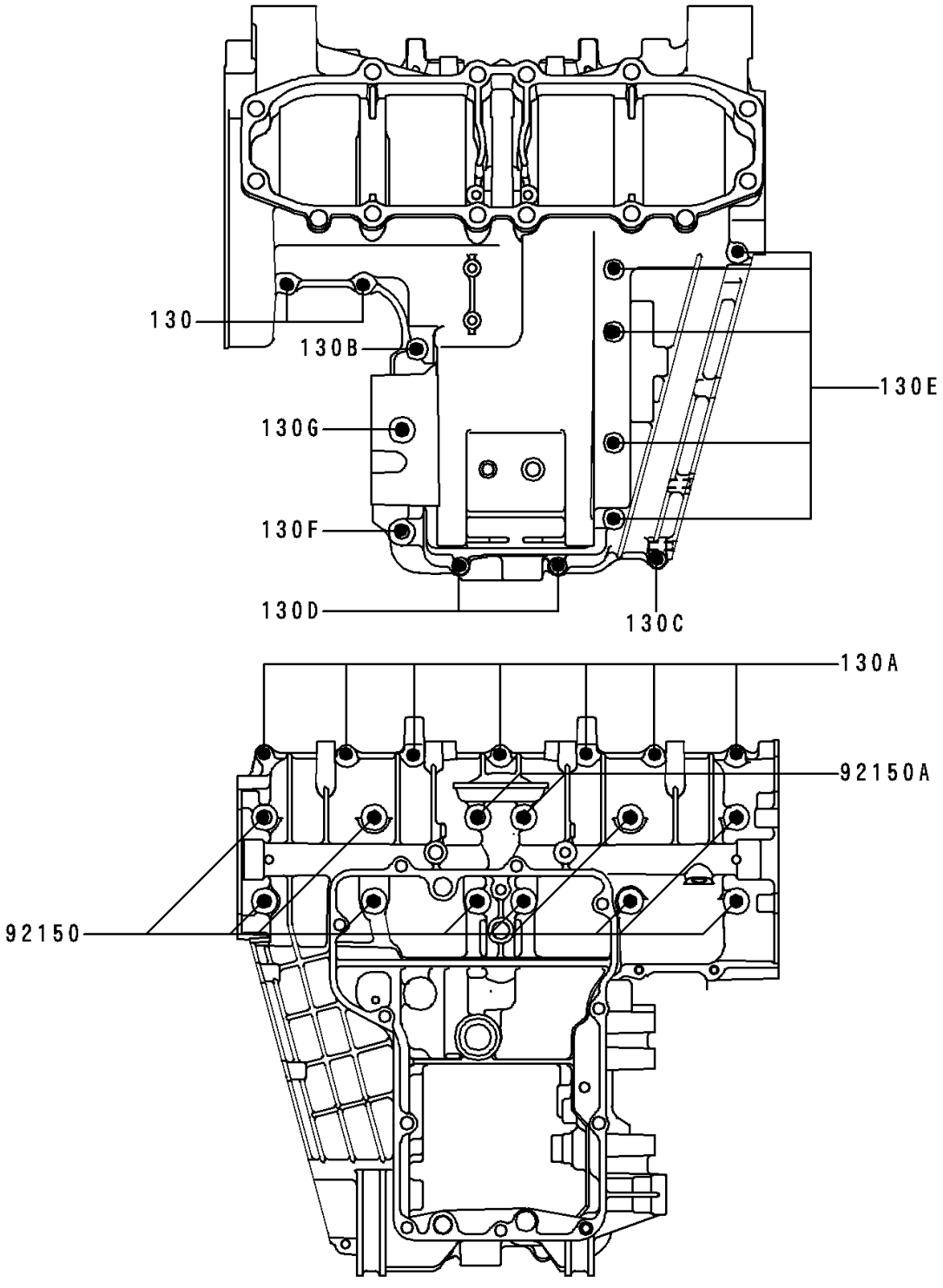

© 2026 Kawasaki Motors Corp., U.S.A.

1998 Ninja® ZX™-6

PARTS LIST

Crankcase Bolt Pattern

ITEM NAME	PART NUMBER	QUANTITY
BOLT-FLANGED,6X30 (Ref # 130)	130G0630	2
BOLT-FLANGED,6X35 (Ref # 130A)	130G0635	7
BOLT-FLANGED,6X45 (Ref # 130B)	130G0645	1
BOLT-FLANGED,6X60 (Ref # 130C)	130G0660	1
BOLT-FLANGED,6X75 (Ref # 130D)	130G0675	2
BOLT-FLANGED,6X90 (Ref # 130E)	130G0690	5
BOLT-FLANGED,8X70 (Ref # 130F)	130P0870	1
BOLT-FLANGED,8X95 (Ref # 130G)	130P0895	1
BOLT,8X90 (Ref # 92150)	92150-1163	10
BOLT,8X120 (Ref # 92150A)	92150-1424	2

© 2026 Kawasaki Motors Corp., U.S.A.