1998 Ninja® ZX™-6

PARTS DIAGRAM

Gear Change Mechanism

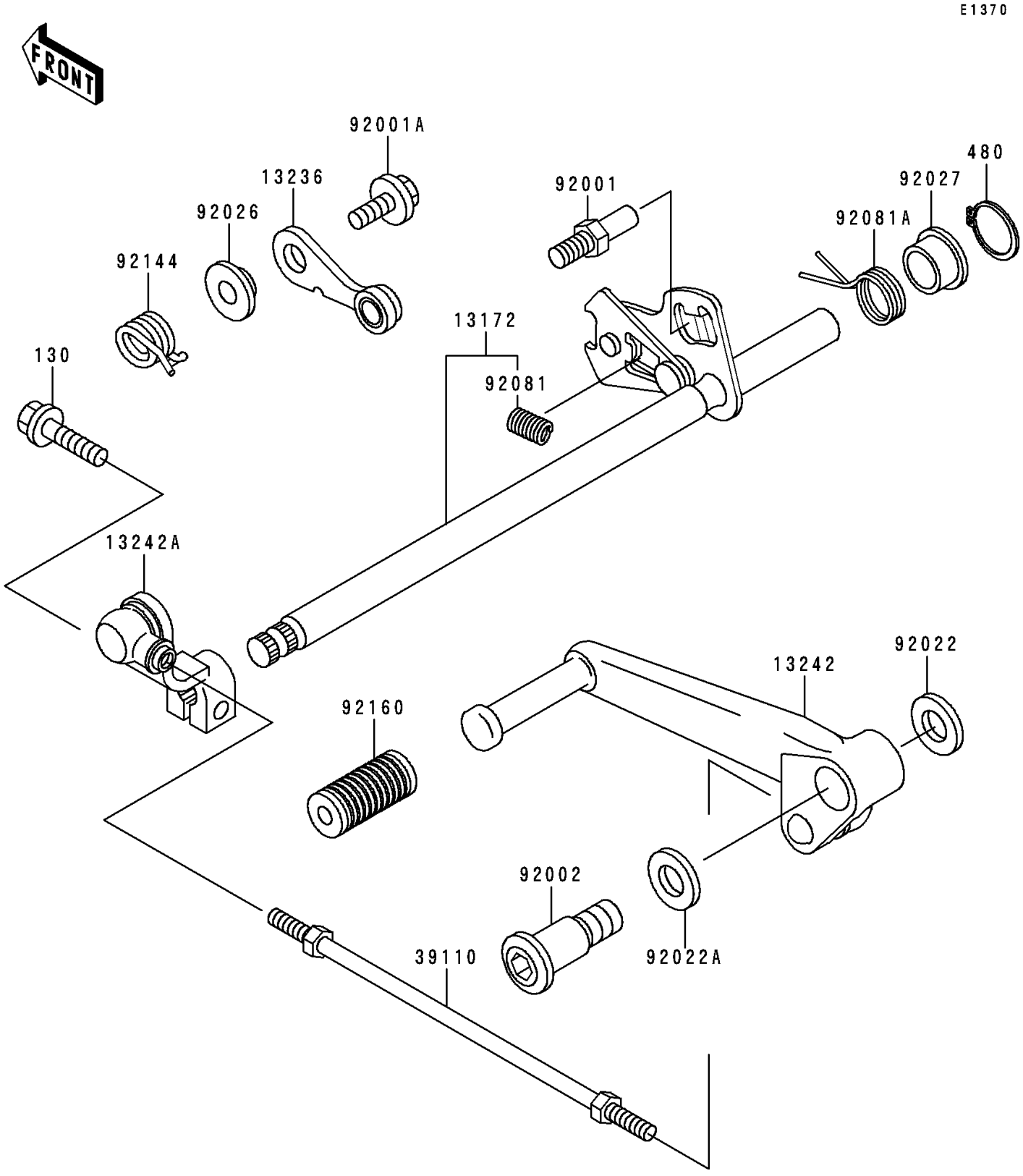

© 2026 Kawasaki Motors Corp., U.S.A.

1998 Ninja® ZX™-6

PARTS LIST

Gear Change Mechanism

ITEM NAME	PART NUMBER	QUANTITY
BOLT-FLANGED,6X20,BLACK (Ref # 130)	130S0620	1
CIRCLIP-TYPE-C,13MM (Ref # 480)	480J1300	1
SHAFT-ASSY-CHANGE (Ref # 13172)	13172-1072	1
LEVER-COMP,NEUTRAL POSITION (Ref # 13236)	13236-1209	1
LEVER-ASSY-CHANGE,PEDAL (Ref # 13242)	13242-1305	1
LEVER-ASSY-CHANGE,LINK (Ref # 13242A)	13242-1306	1
ROD-ASSY-TIE,CHANGE LEVER (Ref # 39110)	39110-1010	1
BOLT,RETURN SPRING (Ref # 92001)	92001-1455	1
BOLT,W/WASHER,6X12 (Ref # 92001A)	92001-1516	1
BOLT,CHANGE PEDAL (Ref # 92002)	92002-1926	1
WASHER,8.5X20X1.6 (Ref # 92022)	92022-1561	1
WASHER,12.5X22X1.2 (Ref # 92022A)	92022-1593	1
SPACER (Ref # 92026)	92026-1217	1
COLLAR,L=10.6 (Ref # 92027)	92027-1801	1
SPRING,CHANGE LEVER (Ref # 92081)	92081-1275	1
SPRING,CHANGE LEVER RETURN (Ref # 92081A)	92081-1279	1
SPRING,RETURN (Ref # 92144)	92144-1693	1
DAMPER,CHANGE PEDAL (Ref # 92160)	92160-1036	1

© 2026 Kawasaki Motors Corp., U.S.A.