1998 Ninja® ZX™-6

PARTS DIAGRAM

Gear Change Drum/Shift Fork(s)

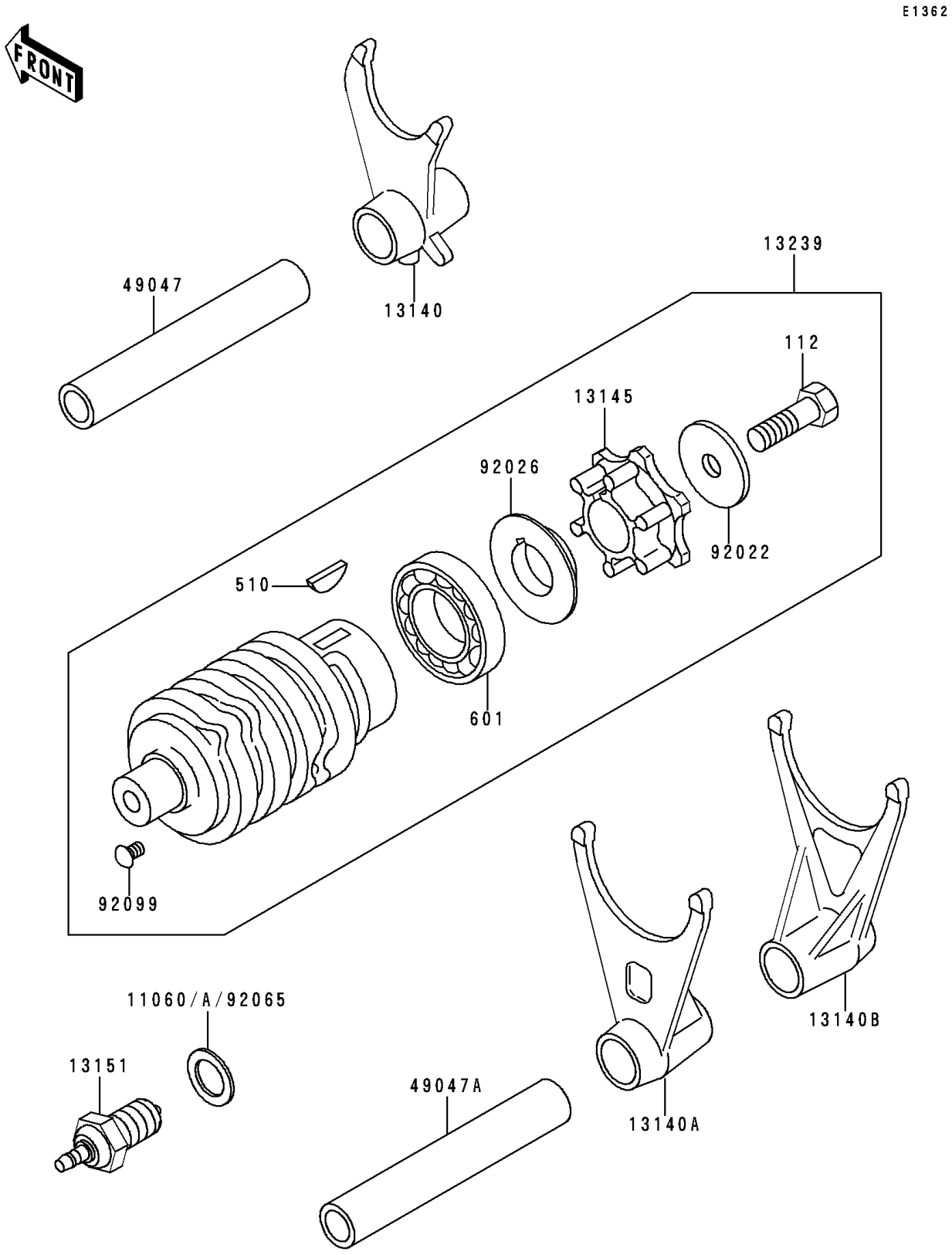

© 2026 Kawasaki Motors Corp., U.S.A.

1998 Ninja® ZX™-6

PARTS LIST

Gear Change Drum/Shift Fork(s)

ITEM NAME	PART NUMBER	QUANTITY
BOLT-UPSET (Ref # 112)	112P0620	1
KEY-WOODRUFF (Ref # 510)	510A3200	1
BEARING-BALL (Ref # 601)	601A6005	1
GASKET,10.5X16X1.5 (Ref # 11060)	11060-1676	AR
GASKET,10.5X16X1.2 (Ref # 11060A)	11060-1684	AR
FORK-SHIFT,INPUT (Ref # 13140)	13140-1153	1
FORK-SHIFT,OUTPUT (Ref # 13140A)	13140-1154	1
FORK-SHIFT,OUTPUT (Ref # 13140B)	13140-1191	1
CAM-CHANGE DRUM (Ref # 13145)	13145-1074	1
SWITCH-COMP,NEUTRAL (Ref # 13151)	13151-1080	1
DRUM-ASSY-CHANGE (Ref # 13239)	13239-1176	1
ROD-SHIFT (Ref # 49047)	49047-1070	1
ROD-SHIFT (Ref # 49047A)	49047-1076	1
WASHER,6.5X24X2 (Ref # 92022)	92022-1690	1
SPACER,CHANGE DRUM (Ref # 92026)	92026-1380	1
GASKET,10.5X16X1,DRAIN PLUG (Ref # 92065)	92065-058	1
RIVET (Ref # 92099)	92099-001	1

© 2026 Kawasaki Motors Corp., U.S.A.