1998 Ninja® ZX™-6

PARTS DIAGRAM

Cylinder Head Cover

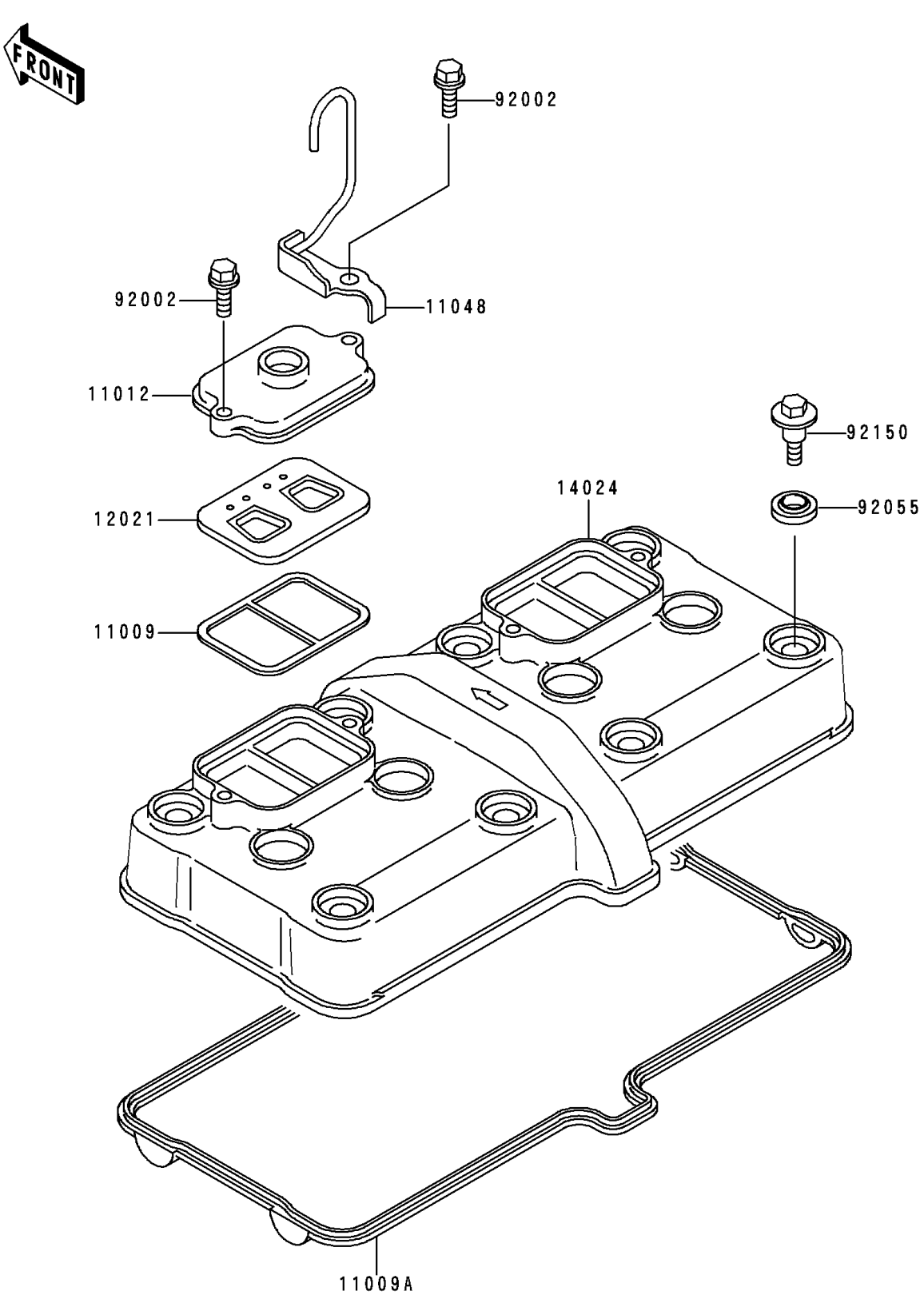

© 2026 Kawasaki Motors Corp., U.S.A.

1998 Ninja® ZX™-6

PARTS LIST

Cylinder Head Cover

ITEM NAME	PART NUMBER	QUANTITY
GASKET,REED VALVE (Ref # 11009)	11009-1857	2
GASKET,HEAD COVER (Ref # 11009A)	11009-1991	1
CAP,REED VALVE (Ref # 11012)	11012-1758	2
BRACKET,THROTTLE CABLE (Ref # 11048)	11048-1204	1
VALVE-ASSY-REED (Ref # 12021)	12021-1053	2
COVER,HEAD (Ref # 14024)	14024-1875	1
BOLT,6X20 (Ref # 92002)	92002-1237	4
RING-O,HEAD COVER BOLT (Ref # 92055)	92055-1352	8
BOLT,HEAD COVER (Ref # 92150)	92150-1447	8

© 2026 Kawasaki Motors Corp., U.S.A.