# 2025 Z900 ABS

## PARTS DIAGRAM

### Accessory(Pillion Seat Cover)

F2910C

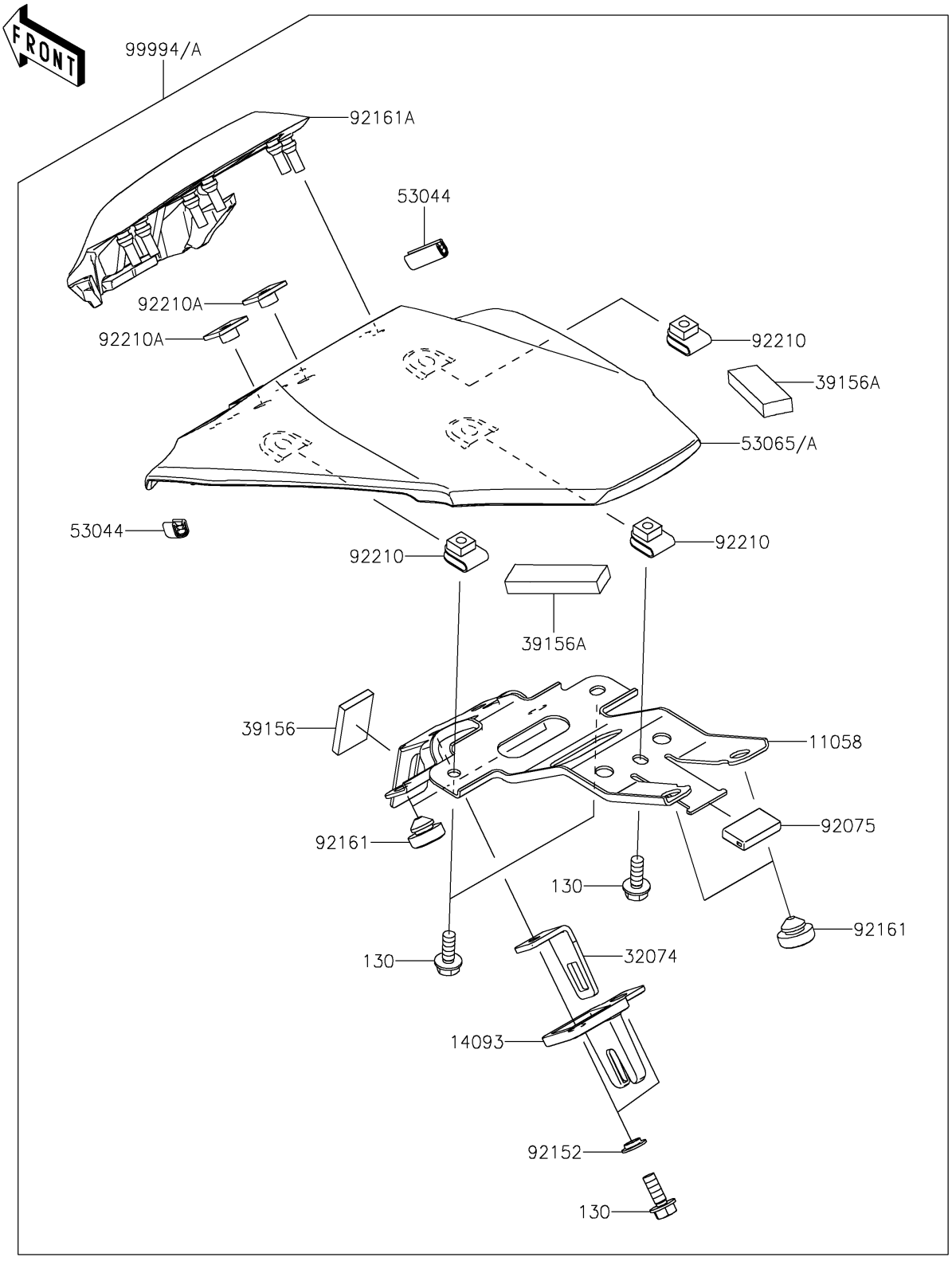


© 2026 Kawasaki Motors Corp., U.S.A.

# 2025 Z900 ABS

## PARTS LIST

### Accessory(Pillion Seat Cover)

| ITEM NAME | PART NUMBER | QUANTITY |
|---|---|---|
| BRACKET (Ref # 11058) | 11058-1890 | 1 |
| COVER (Ref # 14093) | 14093-0515 | 1 |
| BRACKET-LOCK (Ref # 32074) | 32074-0017 | 1 |
| PAD,20X30X4 (Ref # 39156) | 39156-0705 | 1 |
| PAD,50X15X7 (Ref # 39156A) | 39156-2864 | 2 |
| TRIM,L=20 (Ref # 53044) | 53044-0021 | 2 |
| COVER SEAT,M.S.BLACK (Ref # 53065) | 53065-0082-660 | 1 |
| COVER SEAT,G.SILVER (Ref # 53065A) | 53065-0082-79E | 1 |
| DAMPER (Ref # 92075) | 92075-1446 | 1 |
| COLLAR (Ref # 92152) | 92152-0250 | 2 |
| DAMPER,9.5X18X6 (Ref # 92161) | 92161-1473 | 4 |
| DAMPER (Ref # 92161A) | 92161-2741 | 1 |
| NUT,6MM (Ref # 92210) | 92210-0277 | 3 |
| NUT,PLATE,6MM (Ref # 92210A) | 92210-1352 | 2 |
| PILLION SEAT COVER,M.S.BLACK (Ref # 99994) | 99994-2152-660 | 1 |
| PILLION SEAT COVER,G.SILVER (Ref # 99994A) | 99994-2152-79E | 1 |
| BOLT-FLANGED,6X16 (Ref # 130) | 130BA0616 | 5 |

© 2026 Kawasaki Motors Corp., U.S.A.