2025 Z900 ABS

PARTS DIAGRAM

Taillight(s)

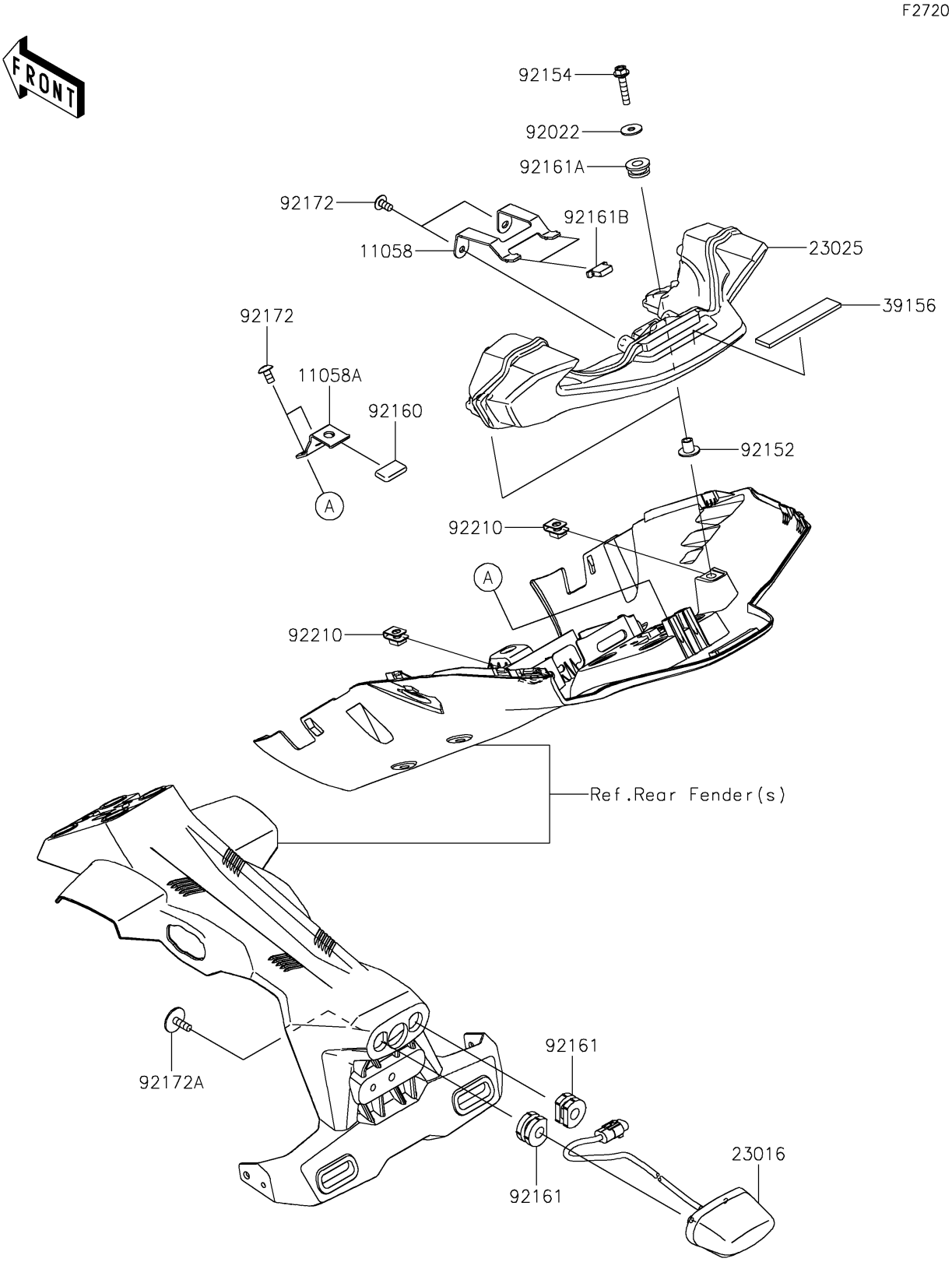

© 2026 Kawasaki Motors Corp., U.S.A.

2025 Z900 ABS

PARTS LIST

Taillight(s)

ITEM NAME	PART NUMBER	QUANTITY
BRACKET,TAIL LAMP,FR (Ref # 11058)	11058-1602	1
BRACKET,TAIL LAMP,RR (Ref # 11058A)	11058-1603	1
LAMP-ASSY,LICENSE,LED (Ref # 23016)	23016-0639	1
LAMP-TAIL,LED (Ref # 23025)	23025-0404	1
PAD,15X76X3 (Ref # 39156)	39156-1928	1
WASHER,5.2X16X1.2 (Ref # 92022)	92022-263	2
COLLAR (Ref # 92152)	92152-1592	2
BOLT,FLANGED,5X25 (Ref # 92154)	92154-0846	2
DAMPER (Ref # 92160)	92160-1190	1
DAMPER (Ref # 92161)	92161-0776	2
DAMPER,8X18X8.1 (Ref # 92161A)	92161-1369	2
DAMPER (Ref # 92161B)	92161-1917	2
SCREW,5X10 (Ref # 92172)	92172-0864	4
SCREW,TAPTITE,5X16 (Ref # 92172A)	92172-1427	2
NUT,PLATE,5MM (Ref # 92210)	92210-0935	2

© 2026 Kawasaki Motors Corp., U.S.A.