2025 Z900 ABS

PARTS DIAGRAM

Front Brake

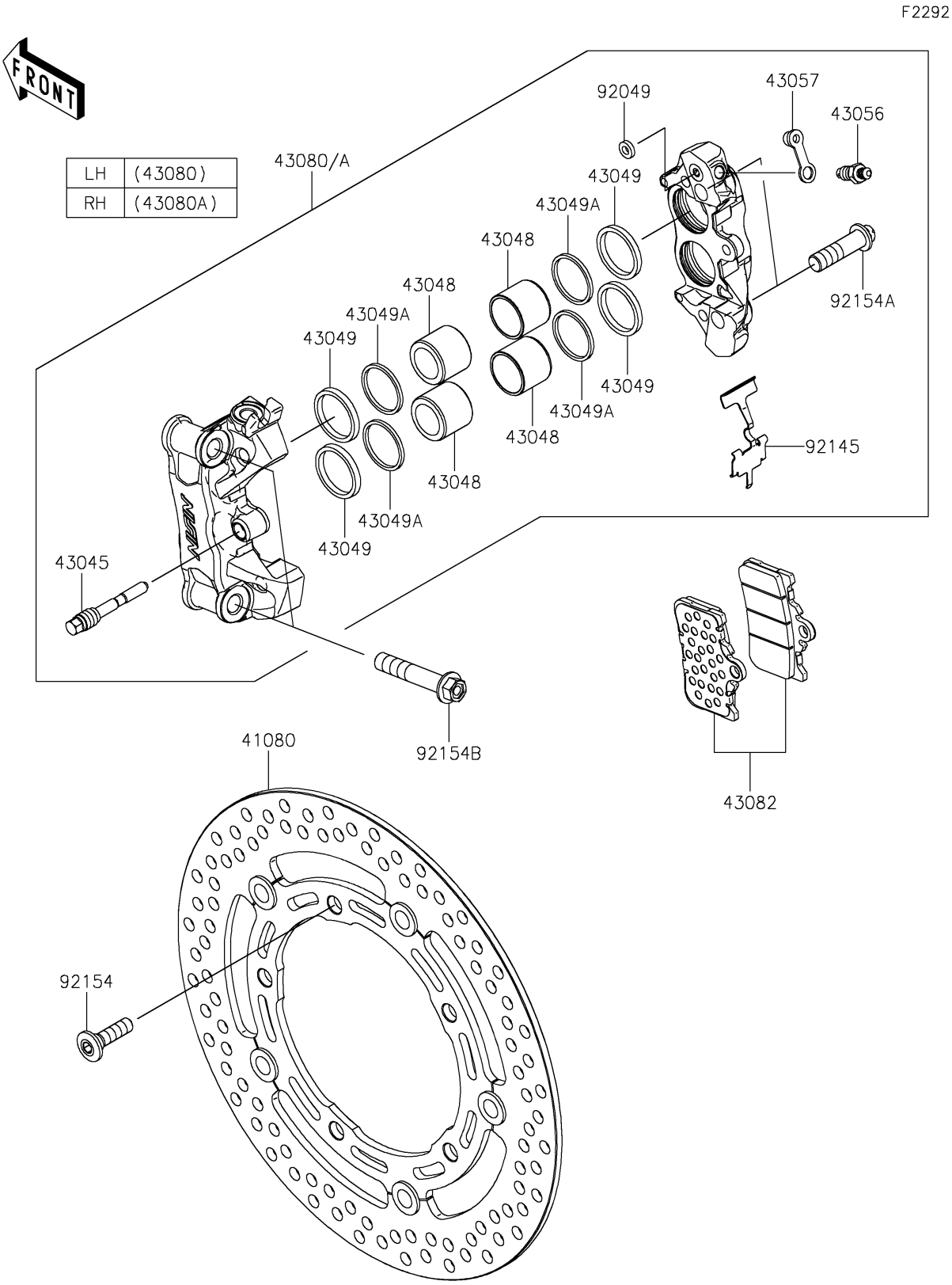

© 2026 Kawasaki Motors Corp., U.S.A.

2025 Z900 ABS

PARTS LIST

Front Brake

ITEM NAME	PART NUMBER	QUANTITY
DISC,FR,BLACK+SIL (Ref # 41080)	41080-0776-11I	2
SHAFT-CALIPER (Ref # 43045)	43045-0020	2
PISTON-CALIPER (Ref # 43048)	43048-0021	8
PACKING,PISTON SEAL (Ref # 43049)	43049-1060	8
PACKING,PISTON SEAL (Ref # 43049A)	43049-1061	8
BREATHER (Ref # 43056)	43056-1055	2
CAP-BREATHER (Ref # 43057)	43057-1001	2
CALIPER-SUB-ASSY,FR,LH,BLACK (Ref # 43080)	43080-0248-DJ	1
CALIPER-SUB-ASSY,FR,RH,BLACK (Ref # 43080A)	43080-0249-DJ	1
PAD-ASSY-BRAKE (Ref # 43082)	43082-0222	2
SEAL-OIL (Ref # 92049)	92049-1448	2
SPRING,PAD (Ref # 92145)	92145-2445	2
BOLT,SOCKET,8X30 (Ref # 92154)	92154-0844	10
BOLT,TORX,10X36 (Ref # 92154A)	92154-7448	4
BOLT,FLANGED,10X55 (Ref # 92154B)	92154-7625	4

© 2026 Kawasaki Motors Corp., U.S.A.